DC Circuits

Problems
&
Solutions

Michael F. McGraw, Ph.D.

DC CIRCUIT ANALYSIS

1. COMBINE ALL SERIES AND PARALLEL RESISTORS WHERE POSSIBLE – THIS REDUCES THE NUMBER OF LOOPS NEEDED.

2. PICK A DIRECTION FOR EACH CURRENT INSIDE EACH CIRCUIT LOOP. IF THE DIRECTION IS WRONG A MINUS SIGN IN THE SOLUTIONS TO THE EQUATIONS WILL POINT THAT OUT.

3. USING KIRCHHOFFS LOOP LAW TO WRITE DOWN THE VOLTAGE DROP LOOP EQUATION FOR EACH CIRCUIT LOOP.

   A. IF THE CURRENT GOES THROUGH A BATTERY IN THE CONVENTIONAL DIRECTION – → + THE VOLTAGE IS ADDED IN WITH A "+" SIGN

   B. IF THE CURRENT GOES THROUGH A BATTERY IN THE OPPOSITE DIRECTION + → – (CHARGING DIRECTION) THE VOLTAGE IS ADDED INTO THE LOOP EQUATION WITH A "–" SIGN.

   C. ALL RESISTORS ARE INCLUDED AS "IR" VOLTAGE DROPS WITH A "–" SIGN (WITHIN THEIR OWN LOOP)

4. SOME ELEMENTS IN THE CIRCUIT WILL HAVE MORE THAN ONE CURRENT PASSING THROUGH IT. THAT CONTRIBUTION FROM OTHER LOOPS NEEDS TO BE INCLUDED IN THE MAIN LOOP EQUATION

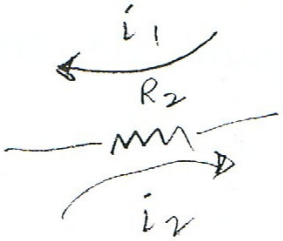

loop 2 terms $\quad -i_2R_2 + i_1R_2$

$\quad -(i_2 - i_1)R_2$

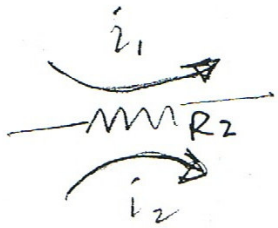

loop 2 terms $\quad -i_2R_2 - i_1R_2$

$\quad -(i_1 + i_2)R_2$

THIS INCORPORATES THE CURRENT NODE EQUATIONS INTO THE VOLTAGE LOOP EQUATIONS

5. THERE SHOULD BE AS MANY VOLTAGE LOOP EQUATIONS AS THERE ARE CURRENT LOOPS

6. SOLVE THESE EQUATIONS FOR EACH OF THE CURRENTS

7. RESOLVE THE CURRENT IN SHARED SEGMENTS USING CONSERVATION OF CURRENT AT THE APPROPRIATE NODE

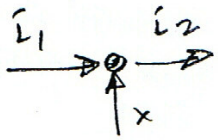

$$-i_1 - x + i_2 = 0$$

$$x = i_2 - i_1$$

- CURRENTS GOING INTO A NODE ARE <u>NEGATIVE</u>
- CURRENTS COMING OUT OF A NODE ARE <u>POSITIVE</u>

8. LABEL THE CURRENTS IN THE VARIOUS SEGMENTS OF THE CIRCUIT

9. LABEL THE VOLTAGE DROPS ACROSS EACH OF THE ELEMENTS OF THE CIRCUIT.

10. CHECK THE NUMBERS. PICK A POINT OF THE CIRCUIT AS GROUND (i.e. 0 VOLTS). LABEL THE VOLTAGES OF ALL THE NODES IN THE CIRCUIT RELATIVE TO GROUND.

ARE THESE CONSISTENT?

DO THE VOLTAGE DROPS AGREE WITH THE CURRENT AND RESISTANCE VALUES?

EXAMPLE 18.4

$R_1 = 6.0\,\Omega$
$R_2 = 3.0\,\Omega$
$R_3 = 10.0\,\Omega$
$V = 12.0\,V$

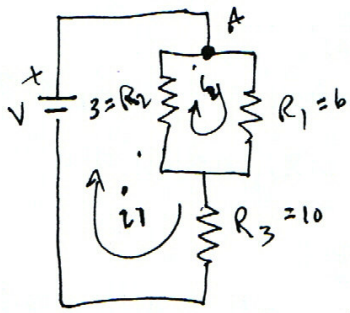

1 CURRENT PER LOOP
PATH WILL FOLLOW DIRECTION OF CURRENT LOOP.

NODE EQN: A

RELATIVE TO OUR LOOP CURRENTS i_1, i_2, i_3

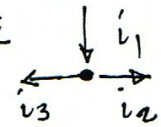

$$\Sigma i = -i_1 + i_2 + i_3 = 0$$
$$i_3 = i_1 - i_2$$
$$i_3 = 1.0 - 1/3$$
$$i_3 = \tfrac{2}{3}A$$

LOOP 1

(1) $V - i_1R_2 - i_1R_3 + i_2R_2 = 0$

(2) $-i_2R_2 - i_2R_1 + i_1R_2 = 0$

SIMPLIFY

(3) $V - i_1(R_2+R_3) + i_2R_2 = 0$

(4) $+i_1R_2 - i_2(R_1+R_2) = 0$

SUBSTITUTE VALUES

(5) $12 - 13i_1 + 3i_2 = 0$

(6) $+3i_1 - 9i_2 = 0$

Eqn(5) x 3 + Eqn(6)

$$36 - 39i_1 + 9i_2 = 0$$
$$+\quad 3i_1 - 9i_2 = 0$$
$$36 - 36i_1 = 0$$
$$36 = 36i_1$$
$$\boxed{1.0A = i_1}$$

SUB INTO EQN (6)

$$+3(1) - 9i_2 = 0$$
$$3 = 9i_2$$
$$\boxed{1/3A = i_2}$$

VOLTAGE DROPS

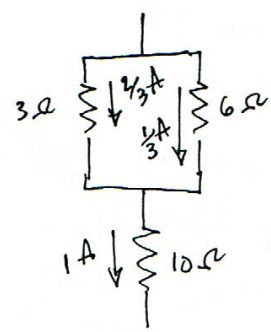

$V_3 = 2V$

$V_6 = I_2 6 = \frac{1}{3}\cdot 6 = 2V$

$V_{10} = 1(10) = 10V.$

POWER

BATTERY $P = VI = 12(1) = 12W$

RESISTORS

$P_3 = V_3 i_3 = 2(\frac{2}{3}) = 4/3\,W$

$P_6 = V_6 i_2 = 2(1/3) = 2/3\,W$

$P_{10} = V_{10} i_1 = 10(1) = 10W$

$12W$

EXAMPLE 18-10

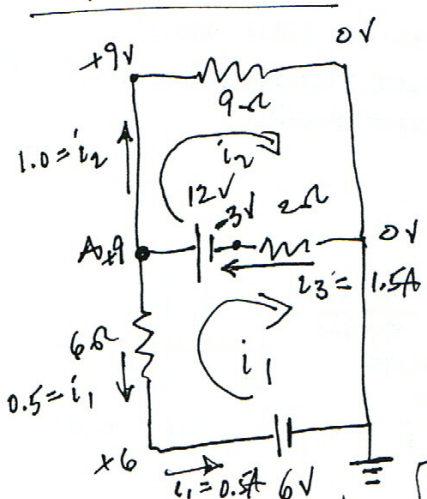

i_1 GOES THRU THE 6V BATTERY BACKWARDS

LOOP 1

$$6 - 6i_1 - 12 - 2i_1 + 2i_2 = 0$$

$$-6 - 8i_1 + 2i_2 = 0$$

LOOP 2

$$12 - 9i_2 - 2i_2 + 2i_1 = 0$$

$$12 - 11i_2 + 2i_1 = 0$$

$$\boxed{\begin{aligned} -8i_1 + 2i_2 &= 6 \quad \text{Eqn(1)} \\ 2i_1 - 11i_2 &= -12 \quad \text{Eqn(2)} \end{aligned}}$$

SIMPLIFY

DIVIDE Eqn(1) BY 2

$$-4i_1 + i_2 = 3$$

SOLVE FOR i_2

$$i_2 = 3 + 4i_1 \quad \text{Eqn (3)}$$

SUB INTO EQN (2)

$$2i_1 - 11i_2 = -12$$

$$2i_1 - 11(3 + 4i_1) = -12$$

$$2i_1 - 33 - 44i_1 = -12$$

$$-42i_1 = -12 + 33 = 21$$

$$i_1 = -\frac{21}{42} = \boxed{-0.5A}$$

SUB INTO Eqn (3)

$$i_2 = 3 + 4i_1 = 3 + 4(-0.5)$$

$$\boxed{i_2 = 1.0A.}$$

NODE A

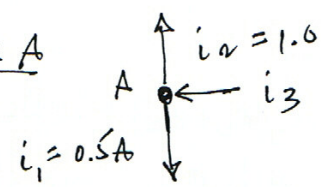

$$\Sigma i = -i_3 + i_1 + i_2 = 0$$

$$i_3 = i_1 + i_2$$

$$= 0.5 + 1.0$$

$$\boxed{i_3 = 1.5A}$$

VOLTAGE DROPS

$$V_6 = i_1 6 = (0.5)6 = 3V$$

$$V_2 = i_3 \cdot 2 = (1.5)(2) = 3V$$

$$V_9 = i_2 \cdot 9 = (1)(9) = 9V.$$

POWER

BATTERIES: $P_6 = 6 \cdot i_1 = 6(\frac{1}{2}) = 3W$

$P_{12} = 12 \cdot i_3 = 12(1.5) = 18W$

15 W

RESISTORS: $R_6 = V_6 \cdot i_1 = 3(0.5) = 1.5W$

$R_2 = V_2 \cdot i_3 = 3(1.5) = 4.5W$

$R_9 = V_9 \cdot i_2 = 9(1) = 9.0W$

15.0 W

DC Circuit Problems

60. Three resistors and two 10.0-V batteries

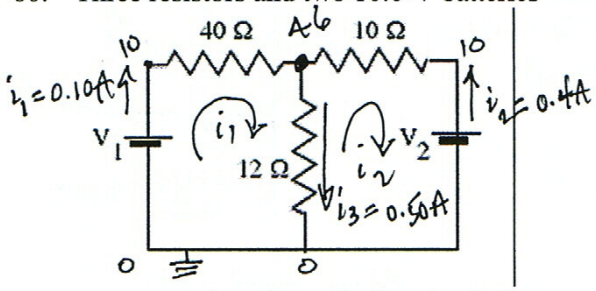

are arranged as shown in the circuit diagram. Which one of the following entries in the table is correct? Power Delivered Power Delivered by Battery 1 by Battery 2

Power Delivered by Battery 1	Power Delivered by Battery 2
(d) 1.0 W	***4.0 W***

USE KIRCHOFF'S LOOP LAW

(1) $V_1 - 40i_1 - 12i_1 + 12i_2 = 0$

(2) $-V_2 - 12i_2 - 10i_2 + 12i_1 = 0$

SIMPLIFY

$-52i_1 + 12i_2 = -10$

$+12i_1 - 22i_2 = 10$

SIMPLIFY SOME MORE

(3) $26i_1 - 6i_2 = 5$

(4) $6i_1 - 11i_2 = 5$

SOLVE (4) FOR i_1

$6i_1 = 5 + 11i_2$

(5) $i_1 = \frac{5}{6} + \frac{11}{6} i_2$

NODE EQN

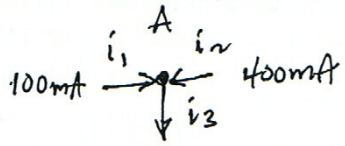

$\Sigma i = -i_1 + i_2 + i_3 = 0$

$i_3 = i_1 + i_2 = 100 + 400 = 500$ mA

VOLTAGE DROPS

$V_{12} = 12(0.5) = 6V$

$V_{40} = 40(0.1) = 4V$

$V_{10} = 10(0.4) = 4V$

POWER

$P_{12} = V_{12} i_3 = 6(1/2) = 3W$

$P_{40} = V_{40} i_1 = 4(0.1) = 0.4W$

$P_{10} = V_{10} i_2 = 4(0.4) = 1.6W$

$P_T = 5.0W$

SUB (5) → (3)

$26i_1 - 6i_2 = 5$

$26\left(\frac{5}{6} + \frac{11}{6} i_2\right) - 6i_2 = 5$

$\frac{13 \cdot 5}{3} + \frac{13 \cdot 11}{3} i_2 - 6i_2 = 5$

$\left(\frac{143}{3} - 6\right) i_2 = 5 - \frac{65}{3}$

$\frac{125}{3} i_2 = \frac{15 - 65}{3} = \frac{-50}{3}$

MULT. BY 3

$125 i_2 = -50$

$$\boxed{i_2 = \frac{-50}{125} = \frac{-2}{5} = -0.40A}$$

SUB INTO (5)

$i_1 = \frac{5}{6} + \frac{11}{6}\left(\frac{-2}{5}\right) = \frac{25}{30} - \frac{22}{30}$

$$\boxed{i_1 = \frac{3}{30} = 0.10\ A}$$

BATTERIES

$P_1 = V_1 i_1 = 10(0.10) = 1W$

$P_2 = V_2 i_2 = 10(0.40) = 4W$

$5W$

61. Three resistors and two batteries are connected as shown in the circuit diagram. Show that the magnitude of the current through the 12-V battery is 0.52A.

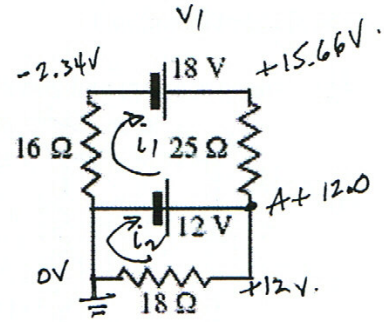

$V_1 = 18V$; $V_2 = 12V$

USE KIRCHOFFS LOOP LAW

(1) $V_1 - 25i_1 - V_2 - 16i_1 = 0$

(2) $V_2 - 18i_2 = 0$

SIMPLIFY

(3) $-41i_1 = V_2 - V_1$

(4) $18i_2 = V_2$

FROM EQN (3) SOLVE FOR i_1

$-41i_1 = 12 - 18 = -6$

$i_1 = \frac{6}{41} = 146\ mA$

FROM EQN (4) SOLVE FOR i_2

$18i_2 = 12$

$i_2 = \frac{12}{18} = 0.667$

$i_2 = 667\ mA$

THE CURRENT LOOPS ARE HEADED IN THE CORRECT DIRECTIONS.

NET CURRENT IN V_2

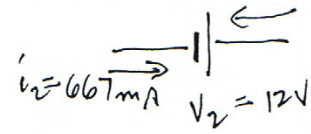

Net CURRENT IN V_2 = 667 − 146

$I = 521\ mA$

NODE EQN A.

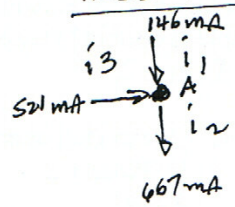

$\Sigma i = -i_1 + i_2 - i_3 = 0$

$i_3 = i_2 - i_1$

$= 667 - 146$

$i_3 = 521\ mA$

VOLTAGES

$V_A = 12V.$

$V_{18} = 18(0.667) = 18\left(\frac{2}{3}\right) = 12V$

$V_{16} = 16(0.146) = 2.34V.$

$V_{25} = 25(0.146) = 3.65V.$

BATTERY POWER

$P_1 = V_1 i_1 = 18(0.146) = 2.63W$

$P_2 = V_2 i_3 = 12(0.521) = 6.25W$

$\boxed{8.88\ W}$

POWER DISSIPATED IN RESISTORS

$P_{16} = V_{16} i_1 = 2.34(0.146) = 0.342\ W$

$= i_1^2 R = (0.146)^2 16 = 0.341\ W$

$P_{25} = V_{25} i_1 = 3.65(0.146) = 0.533\ W$

$P_{18} = V_{18} i_2 = 12(0.667) = 8.00\ W$

$P_{16} + P_{25} + P_{18} =$

$0.342 + 0.533 + 8.00 = \boxed{8.88\ W}$

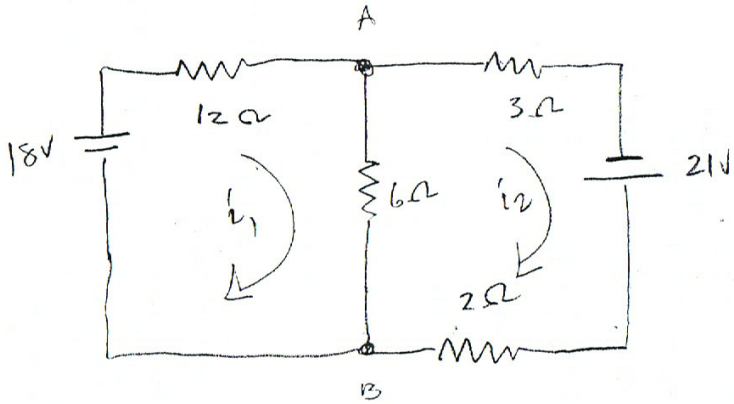

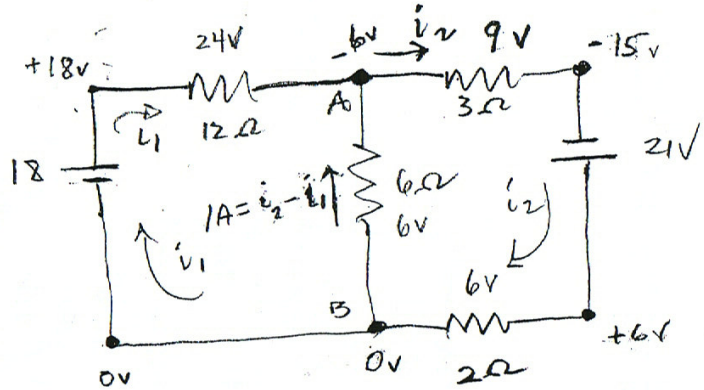

$$18 - 12i_1 - 6i_1 + \underline{6i_2} = 0$$
$$18 - 18i_1 + 6i_2 = 0$$
$$3 - 3i_1 + i_2 = 0$$

$$-3i_2 + 21 - 2i_2 - 6i_2 + \underline{6i_1} = 0$$
$$21 - 11i_2 + 6i_1 = 0$$
$$21 + 6i_1 - 11i_2 = 0$$

$$\boxed{\begin{aligned} 3 &= 3i_1 - i_2 \\ 21 &= -6i_1 + 11i_2 \end{aligned}}$$

$$i_2 = 3i_1 - 3 = 3(2) - 3 = \underline{3A}.$$
$$21 = -6i_1 + 11(3i_1 - 3)$$
$$21 = -6i_1 + 33i_1 - 33$$
$$54 = 27i_1$$
$$\boxed{2A = i_1}$$

NODE A

$$-i_1 - x + i_2 = 0$$
$$i_2 - i_1 = x$$
$$3A - 2A = 1A = x$$

NODE B

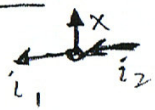

$$i_1 + x - i_2 = 0$$
$$x = i_2 - i_1$$
$$= 3A - 2A$$
$$x = 1A$$

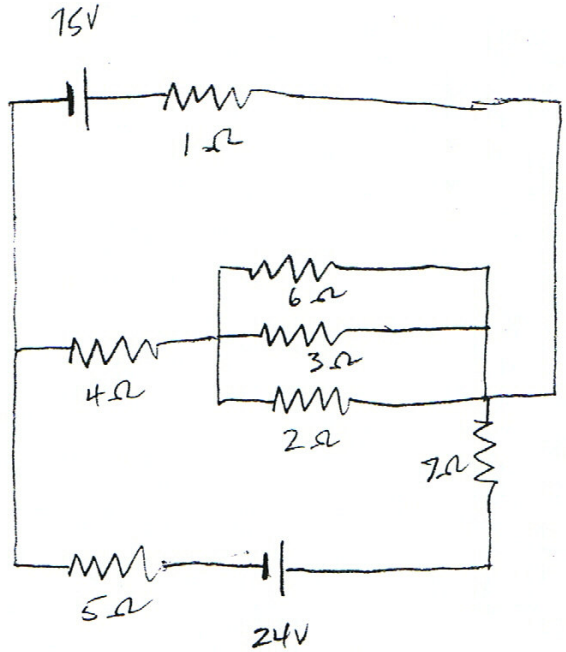

combine 6, 3, 2

$$\frac{1}{R_{eq}} = \frac{1}{6} + \frac{1}{3} + \frac{1}{2} = \frac{1+2+3}{6} = 1$$

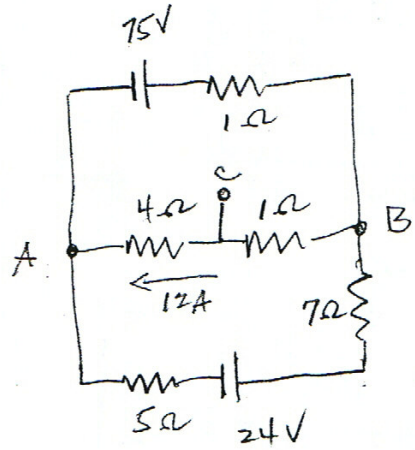

$V_{BC} = 12V$

<u>Loop 1</u>

$$75V - i_1 - 5i_1 + 5i_2 = 0$$

<u>Loop 2</u>

$$-24V - 5i_2 - 5i_2 + 5i_1 - 7i_2 = 0$$

$$\boxed{\begin{aligned} 75 - 6i_1 + 5i_2 &= 0 \\ 24 - 5i_1 + 17i_2 &= 0 \end{aligned}}$$

Eqn (1)

Eqn (2)

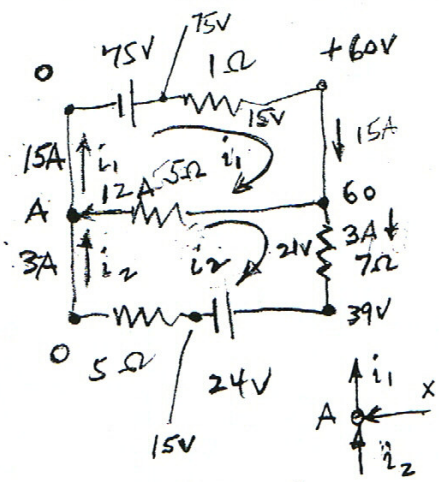

SOLVE EQN (1) FOR i_1

$$6i_1 = 75 + 5i_2$$

Eqn (3) $\quad i_1 = \frac{75}{6} + \frac{5}{6} i_2 = \frac{75}{6} + \frac{5}{6} \cdot 3 = \frac{90}{6} = \underline{15A}$

SUBSTITUTE INTO EQN (2)

$$24 - 5\left(\frac{75}{6} + \frac{5}{6} i_2\right) + 17 i_2 = 0$$

$$24 - \frac{375}{6} - \frac{25}{6} i_2 + 17 i_2 = 0$$

$$144 - 375 - 25 i_2 + 102 i_2 = 0$$

$$-231 + 77 i_2 = 0$$

$$77 i_2 = +231$$

$$i_2 = +\frac{231}{77} = \underline{+3A}$$

Sub. in Eqn (3)

<u>NODE A</u>

$$i_1 - i_2 - x = 0$$

$$x = i_1 - i_2$$

$$x = 15 - 3 = 12A$$

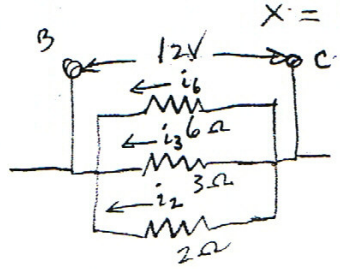

$$i_6 = \frac{12}{6} = 2A$$

$$i_3 = \frac{12}{3} = 4A$$

$$i_4 = \frac{12}{2} = 6A$$

12A

EX 18.4

CURRENT SOLUTIONS VIA NODE EQUATION

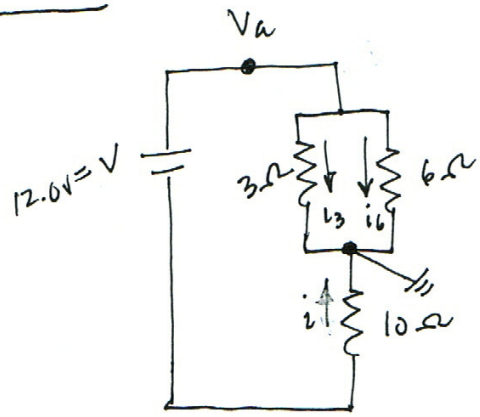

$$\frac{V_a}{3} + \frac{V_a}{6} + \frac{+V_a - 12}{10} = 0$$

$$V_a\left(\frac{1}{3} + \frac{1}{6}\right) + \frac{+V_a - 12}{10} = 0$$

$$V_a\left(\frac{6+3}{18}\right) + \frac{+V_a - 12}{10} = 0$$

$$V_a\left(\frac{9}{18}\right) + \frac{V_a}{10} = \frac{12}{10} = \frac{6}{5}$$

$$V_a\left(\frac{1}{2} + \frac{1}{10}\right) = \frac{6}{5}$$

$$V_a \frac{6}{10} = \frac{6}{5}.$$

$$V_a = \frac{\cancel{6}}{5} \cdot \frac{10}{\cancel{6}} = 2\,V$$

$$V_a = 2.0\,V.$$

$$i = \frac{V_a - 12}{10} = \frac{2 - 12}{10} = \frac{-10}{10}$$

$$i = -1.0\,A$$

$$i_6 = \frac{V_a}{6} = \frac{2}{6} = \frac{1}{3}\,A$$

$$i_3 = \frac{V_a}{3} = \frac{2}{3} = \frac{2}{3}\,A$$

EXAMPLE 18-10

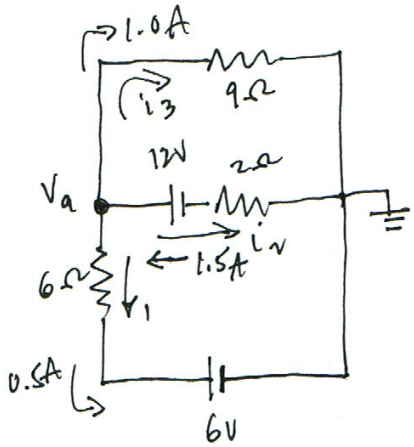

$$\frac{V_a-6}{6} + \frac{V_a-12}{2} + \frac{V_a}{9} = 0$$

MULTIPLY BY 18

$$3(V_a-6) + 9(V_a-12) + 2V_a = 0$$

$$3V_a + 9V_a + 2V_a - 18 - 108 = 0$$

$$14V_a = 126$$

$$V_a = \frac{126}{14} = \frac{63}{7} = 9.0V$$

$$i_1 = \frac{V_a-6}{6} = \frac{9-6}{6} = \frac{3}{6} = 0.5A$$

$$i_2 = \frac{V_a-12}{2} = \frac{9-12}{2} = \frac{-3}{2} = -1.5A$$

$$i_3 = \frac{V_a}{9} = \frac{9}{9} = 1.0A$$

#60

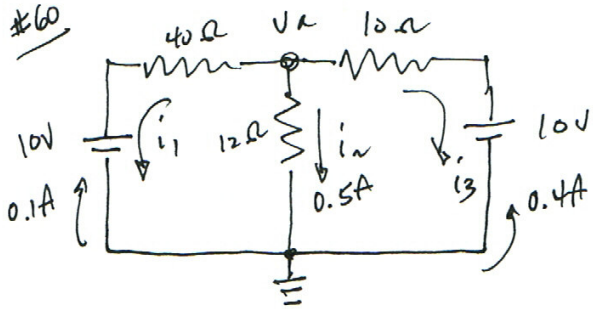

$$\frac{V_a-10}{40} + \frac{V_a}{12} + \frac{V_a-10}{10} = 0$$

MULTIPLY BY 120

$$3(V_a-10) + 10V_a + 12(V_a-10) = 0$$

$$3V_a + 10V_a + 12V_a - 30 - 120 = 0$$

$$25V_a = +150$$

$$V_a = +\frac{150}{25} = 6.0V.$$

$$i_1 = \frac{V_a-10}{40} = \frac{6-10}{40} = \frac{-4}{40} = -\frac{1}{10}A = -0.1A$$

$$i_2 = \frac{V_a}{12} = \frac{6}{12} = 0.5A$$

$$i_3 = \frac{V_a-10}{10} = \frac{6-10}{10} = \frac{-4}{10} = -0.4A$$

61.

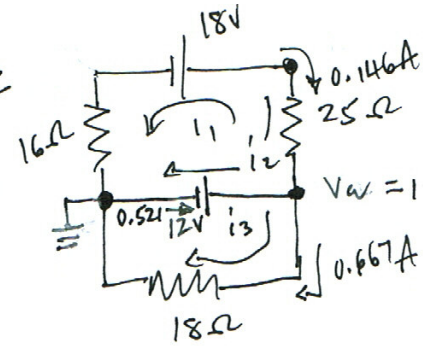

$\Sigma i = i_1 + i_2 + i_3 = 0$

$i_1 = \frac{V_a - 18}{41} = \frac{12-18}{41} = \frac{-6}{41}$

$i_1 = -0.146A$

$i_3 = \frac{V_a}{18} = \frac{12}{18} = 0.667$

$i_2 = -i_1 - i_3 = -(-0.146) - 0.667$

$i_2 = 0.146 - 0.667$

$i_2 = -0.521A$

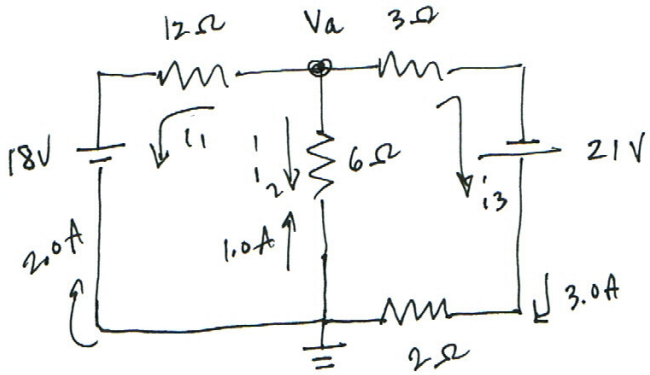

$\frac{V_a - 18}{12} + \frac{V_a}{6} + \frac{V_a + 21}{5} = 0$

MULTIPY BY 60

$5(V_a - 18) + 10V_a + 12(V_a + 21) = 0$

$5V_a + 10V_a + 12V_a - 90 + 252 = 0$

$27V_a = -162$

$V_a = \frac{-162}{27} = -\frac{54}{9} = -6.0V.$

$i_1 = \frac{V_a - 18}{12} = \frac{-6-18}{12} = \frac{-24}{12} = -2.0A$

$i_2 = \frac{V_a}{6} = \frac{-6}{6} = -1.0A$

$i_3 = \frac{V_a + 21}{5} = \frac{-6+21}{5} = \frac{15}{5} = 3.0A$

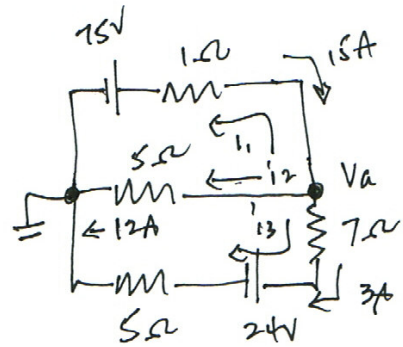

$$\frac{V_a - 75}{1} + \frac{V_a}{5} + \frac{V_a - 24}{12} = 0$$

MULTIPLY BY 60

$$60(V_a - 75) + 12V_a + 5(V_a - 24) = 0$$

$$60V_a + 12V_a + 5V_a - 4500 - 120 = 0$$

$$77V_a = 4620$$

$$V_a = \frac{4620}{77} = 60.0\,V.$$

$$i_1 = \frac{V_a - 75}{1} = 60 - 75 = -15A$$

$$i_2 = \frac{V_a}{5} = \frac{60}{5} = 12.0A$$

$$i_3 = \frac{V_a - 24}{12} = \frac{60 - 24}{12} = 5 - 2 = 3.0A$$