Exam 3 Review Questions
PHY 2425 - Exam 3

Section: 8–1 Topic: Conservation of Linear Momentum Type: Numerical

1 An automobile of mass 1300 kg has an initial velocity of 7.20 m/s toward the north and a final velocity of 6.50 m/s toward the west. The magnitude and direction of the change in momentum of the car are

A) 1.26×10^4 kg · m/s at 48º S of E
B) 1.26×10^4 kg · m/s at 48º S of W
C) 1.26×10^4 kg · m/s at 48º N of W
D) 1.78×10^4 kg · m/s at 48º N of W
E) 910 kg · m/s at 48º S of E

Ans: B

Section: 8–1 Topic: Conservation of Linear Momentum Type: Conceptual

4 Two students, sitting on frictionless carts, push against each other. Both are initially at rest and the mass of student 1 and the cart is M, and that of student 2 and the cart is 1.5M. If student 1 pushes student 2 so that she recoils with velocity $-\vec{v}$, what is the velocity of student 2.

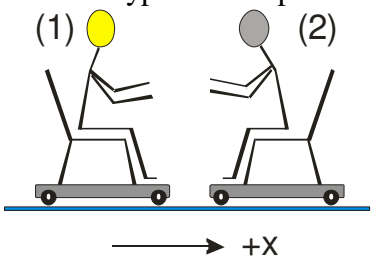

A) $\vec{v}$
B) $-\frac{2}{3}\vec{v}$
C) $+1.5\vec{v}$
D) $-1.5\vec{v}$
E) $+\frac{2}{3}\vec{v}$

Ans: E

Section: 8–1 Topic: Conservation of Linear Momentum Type: Conceptual

5 Two students, sitting on frictionless carts, push against each other. Both are initially at rest and the mass of student 1 and the cart is M, and that of student 2 and the cart is 1.5M. If student 1 pushes student 2 so that she recoils with velocity $-\vec{v}$, what is the change in momentum of the two students?

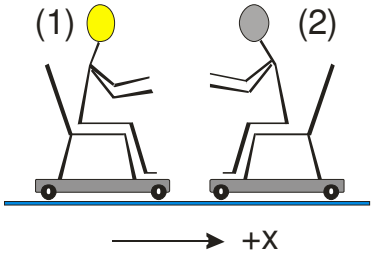

A) $-2.5M\vec{v}$
B) $-\frac{2}{3}M\vec{v}$
C) 0
D) $+2.5M\vec{v}$
E) $+\frac{2}{3}M\vec{v}$

Ans: C

Section: 8–1 Topic: Conservation of Linear Momentum Type: Numerical

6 For this question, assume that all velocities are horizontal and that there is no friction. Two skaters A and B are on an ice surface. A and B have the same mass $M = 90.5$ kg. A throws a ball with mass $m = 200$ g toward B with a speed $v = 21.5$ m/s relative to the ice. B catches the ball and throws it back to A with the same speed. After A catches the ball, his speed with respect to the ice is

A) 4.3×10^{3} m/s
B) 4.3 m/s
C) 4.8×10^{-2} m/s
D) 9.5×10^{-2} m/s
E) 0.34 m/s

Ans: D

Section: 8–1 Topic: Conservation of Linear Momentum Type: Conceptual

7 The condition necessary for the Conservation of Linear Momentum in a given system is that

A) energy is conserved.
B) one body is at rest.
C) the net external force is zero.
D) internal forces equal external forces.
E) None of these is correct.

Ans: C

Section: 8–1 Topic: Conservation of Linear Momentum Type: Conceptual

9 A boy and girl on ice skates face each other. The girl has a mass of 20 kg and the boy has a mass of 30 kg. The boy pushes the girl backward at a speed of 3.0 m/s. As a result of the push, the speed of the boy is

A) zero B) 2.0 m/s C) 3.0 m/s D) 4.5 m/s E) 9.0 m/s

Ans: B

Section: 8–1 Topic: Conservation of Linear Momentum Type: Numerical

10

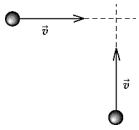

Two identical bodies of mass M move with equal speeds v. The direction of their velocities is illustrated above. The magnitude of the linear momentum of the system is

A) $2Mv$ B) Mv C) $4Mv$ D) $\sqrt{2}\,Mv$ E) $4\sqrt{2}\,Mv$

Ans: D

Section: 8–1 Topic: Conservation of Linear Momentum Type: Numerical

11 A car of mass 1850 kg is traveling at 22.5 m/s in a straight line. A truck of mass 3170 kg has the same momentum as the car. The speed of the truck is

A) 38 m/s B) 13 m/s C) 10 m/s D) 40 m/s E) 27 m/s

Ans: B

Section: 8–2 Topic: Kinetic Energy of a System Type: Conceptual

12 A golf ball and a Ping-Pong ball are dropped in a vacuum chamber. When they have fallen halfway to the floor, they have the same

A) speed.
B) potential energy.
C) kinetic energy.
D) momentum.
E) speed, potential energy, kinetic energy, and momentum.

Ans: A

Section: 8–2 Topic: Kinetic Energy of a System Type: Conceptual

13 In any and all collisions of short duration and for which it is true that no external forces act on the collision participants,

A) kinetic energy is conserved.
B) both momentum and kinetic energy are conserved.
C) neither momentum nor kinetic energy is conserved.
D) the relative velocities before and after impact are equal and oppositely directed.
E) momentum is conserved.

Ans: E

Section: 8–2 Topic: Kinetic Energy of a System Type: Conceptual

14 For a system consisting of two particles that undergo an elastic collision,

A) momentum is conserved but the total energy is not conserved.
B) neither the kinetic energy nor the momentum is conserved.
C) neither the total energy nor the momentum is necessarily conserved.
D) the mechanical energy is conserved but momentum is not conserved.
E) both kinetic energy and momentum are conserved.

Ans: E

Section: 8–2 Topic: Kinetic Energy of a System Type: Conceptual

15 If a body moves in such a way that its linear momentum is constant, then

A) its kinetic energy is zero.
B) the sum of all the forces acting on it must be zero.
C) its acceleration is greater than zero and is constant.
D) its center of mass remains at rest.
E) the sum of all the forces acting on the body is constant and nonzero.

Ans: B

Section: 8–2 Topic: Kinetic Energy of a System Type: Conceptual

16 If you take the derivative of the kinetic energy of a particle with respect to its velocity, you get

A) force. B) momentum. C) acceleration. D) mass. E) potential energy.

Ans: B

Section: 8–2 Topic: Kinetic Energy of a System Type: Conceptual

17 If the momentum of a mass M is doubled, its kinetic energy will be multiplied by a factor of

A) $\frac{1}{2}$ B) 2 C) $\sqrt{2}$ D) 4 E) $1/\sqrt{2}$

Ans: D

Section: 8–2 Topic: Kinetic Energy of a System Type: Conceptual

18 Two particles, each of mass m, are moving with velocity $-\vec{v}$ and $2\vec{v}$. The kinetic energy at the center-of-mass is

A) $\frac{1}{2}\ mv^2$

B) mv^2

C) $\frac{1}{2}\ mv^2$

D) $2mv^2$

E) $4mv^2$

Ans: C

Section: 8–3 Topic: Collisions Type: Conceptual

19 A superball of mass m is dropped vertically from a height, h. If the impact time with the floor is Δt, what is the average force on the ball? (Assume that the superball bounces back to the same height.)

A) $2m\sqrt{2gh}/\Delta t$

B) $2m\sqrt{gh}/\Delta t$

C) $m\sqrt{2gh}/2\Delta t$

D) $m\sqrt{gh}/2\Delta t$

E) none of the above

Ans: A

Section: 8–3 Topic: Collisions Type: Numerical

20 Calculate the impulse by the force, as shown in the figure below.

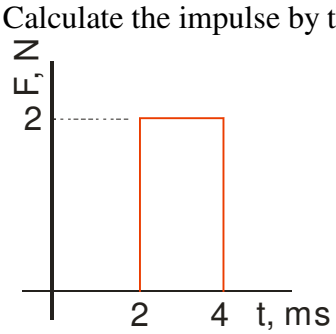

A) 1.0 mN·s

B) 2.0 mN·s

C) 4.0 mN·s

D) 10.0 mN·s

E) 40.0 mN·s

Ans: C

Section: 8–3 Topic: Collisions Type: Numerical

23 An object of mass M_1 is moving with a speed v on a straight, level, frictionless track when it collides with another mass M_2 that is at rest on the track. After the collision, M_1 and M_2 stick together and move with a speed of

A) v B) M_1v C) $(M_1 + M_2)v/M_1$ D) $M_1v/(M_1 + M_2)$ E) M_1v/M_2

Ans: D

Section: 8–3 Topic: Collisions Type: Conceptual

25 A 40-kg girl, standing at rest on the ice, gives a 60-kg boy, who is also standing at rest on the ice, a shove. After the shove, the boy is moving backward at 2.0 m/s. Ignore friction. The girl's speed is

A) zero B) 1.3 m/s C) 2.0 m/s D) 3.0 m/s E) 6.0 m/s

Ans: D

Section: 8–3 Topic: Collisions Type: Numerical

26 A moving particle is stopped by a single head-on collision with a second, stationary particle if the moving particle undergoes

A) an elastic collision with a second particle of much smaller mass.
B) an elastic collision with a second particle of much greater mass.
C) an elastic collision with a second particle of equal mass.
D) an inelastic collision with a second particle of any mass.
E) any type of collision in which the coefficient of restitution is zero.

Ans: C

Section: 8–3 Topic: Collisions Type: Conceptual

27 Five billiard balls are in contact and at rest on a wire that passes through their centers. Two billiard balls are slammed into one end of the row of five at a velocity $\vec{v}$. If the balls are free to slide but not roll and if the collision is elastic, which of the following is most likely to take place?

A) One ball at each end goes off with a speed v.
B) One ball on the side opposite the striking balls goes off with a speed of $2v$.
C) The five balls move off together with a speed of $2v/5$.
D) Two balls on the side opposite the striking balls go off with a speed of v.
E) None of these will occur.

Ans: D

Section: 8–3 Topic: Collisions Type: Numerical

30 A toy car of mass 2.0 kg moving to the right with a speed of 8.0 m/s collides perfectly inelastically with another toy car of mass 3.0 kg that is moving to the left with a speed of 2.0 m/s. Immediately after the collision the velocity of the system is

A) 4.4 m/s to the right.
B) 2.0 m/s to the right.
C) 0 m/s
D) –2.0 m/s to the right.
E) 10 m/s to the right.

Ans: B

Section: 8–3 Topic: Collisions Type: Numerical

31 Glider A, traveling at 10 m/s on an air track, collides elastically with glider B traveling at 8.0 m/s in the same direction. The gliders are of equal mass. The final speed of glider B is

A) 8.4 m/s B) 10 m/s C) 8.0 m/s D) 4.0 m/s E) 12 m/s

Ans: B

Section: 8–3 Topic: Collisions Type: Numerical

32 A railway car having a total mass of 5.8×10^5 kg, moving with a speed of 9.1 km/h, strikes another car that has a mass of 8.7×10^5 kg and is initially at rest. The speed of the coupled cars after the collision is

A) 9.1 km/h B) 7.2 km/h C) 3.6 km/h D) 1.8 km/h E) 4.2 km/h

Ans: C

Section: 8–3 Topic: Collisions Type: Numerical

33 A block of wood with a mass $M = 4.65$ kg is resting on a horizontal surface when a bullet with a mass $m = 18$ g and moving with a speed $v = 725$ m/s strikes it. The coefficient of friction between the block and the surface is $\mu = 0.35$. The distance the block moves across the surface is

A) 1.1 m B) 3.3 m C) 0.41 m D) 11 m E) None of these is correct.

Ans: A

Section: 8–3 Topic: Collisions Type: Numerical

34 A mass $m_1 = 2.5$ kg is connected to another mass $m_2 = 4.0$ kg by a compressed spring. Both masses are at rest on a frictionless surface. When the spring is released, the masses are pushed apart and a total energy of 16.8 J is given to the two masses. The speed of mass m_1 is

A) 3.2 m/s B) 2.9 m/s C) 1.8 m/s D) 8.3 m/s E) 5.4 m/s

Ans: B

Section: 8–3 Topic: Collisions Type: Conceptual

36 Two cars of equal mass travel in opposite directions at equal speeds. They collide in a perfectly inelastic collision. Just after the collision, their velocities are

A) zero.
B) equal to their original velocities.
C) equal in magnitude but opposite in direction to their original velocities.
D) less in magnitude and in the same direction as their original velocities.
E) less in magnitude and opposite in direction to their original velocities.

Ans: A

Section: 8–3 Topic: Collisions Type: Conceptual

37 Two equal masses travel in opposite directions with equal speed. If they collide in a perfectly elastic collision, then, just after the collision, their velocities will be

A) zero.
B) equal to their original velocities.
C) equal in magnitude but opposite in direction to their original velocities.
D) less in magnitude and in the same direction as their original velocities.
E) less in magnitude and opposite in direction to their original velocities.

Ans: C

Section: 8–3 Topic: Collisions Type: Conceptual

38 Two equal masses travel in opposite directions with equal speeds. They collide in a collision that is between elastic and inelastic. Just after the collision, their velocities are

A) zero.
B) equal to their original velocities.
C) equal in magnitude but opposite in direction to their original velocities.
D) less in magnitude and in the same direction as their original velocities.
E) less in magnitude and opposite in direction to their original velocities.

Ans: E

Section: 8–3 Topic: Collisions Type: Numerical

39 A bullet of mass m and velocity $\vec{u}$ strikes and becomes imbedded in a wooden block of mass M, which is initially at rest on a frictionless surface. The ratio of the velocity of the system after collision to the initial velocity of the bullet is

A) $(M + m)/m$
B) $(M + m)/M$
C) $M/(m + M)$
D) $m/(m + M)$
E) $M/(m - M)$

Ans: D

Section: 8–3 Topic: Collisions Type: Conceptual

46 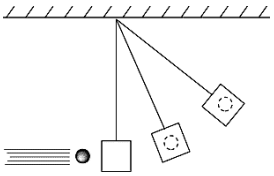

The figure shows a ballistic pendulum in three states. The system (considered to be the ball and the pendulum) will move in such a way that

A) the kinetic energy is conserved during the collision.
B) the linear momentum is conserved after the collision.
C) the linear momentum is not conserved during the collision.
D) the total mechanical energy is conserved during the collision.
E) the total mechanical energy is conserved after the collision.

Ans: E

Section: 8–3 Topic: Collisions Type: Conceptual

50 In a real collision,

A) kinetic energy is conserved.
B) linear momentum is conserved in the absence of external forces.
C) both momentum and kinetic energy are conserved.
D) neither momentum nor kinetic energy is conserved.
E) the extent to which momentum and kinetic energy are conserved depends on the coefficient of restitution.

Ans: B

Section: 8–3 Topic: Collisions Type: Numerical

54 A particle with speed $v_1 = 2.64 \times 10^6$ m/s makes a glancing elastic collision with another particle that is at rest. Both particles have the same mass. After the collision, the struck particle moves off at 45º to v_1. The speed of the struck particle after the collision is approximately

A) 3.4×10^6 m/s
B) 1.3×10^6 m/s
C) 0.53×10^6 m/s
D) 1.9×10^6 m/s
E) 6.4×10^6 m/s

Ans: D

Section: 8–3 Topic: Collisions Type: Conceptual

56 In an elastic collision of two objects,

A) momentum is not conserved.
B) momentum is conserved, and the kinetic energy after the collision is less than its value before the collision.
C) momentum is conserved, and the kinetic energy after the collision is the same as the kinetic energy before the collision.
D) momentum is not conserved, and the kinetic energy of the system after the collision differs from the kinetic energy of the system before the collision.
E) the kinetic energy of the system after the collision depends on the masses of the objects.

Ans: C

Section: 8–3 Topic: Collisions Type: Numerical

57 Two identical cars approach an intersection. One is traveling east at 18 m/s. The second is traveling north at 24 m/s. They collide violently, sticking together. Immediately after the crash they are moving

A) 30 m/s, 37º N of E
B) 30 m/s, 37º E of N
C) 15 m/s, 37º N of E
D) 15 m/s, 37º E of N
E) 42 m/s, 37º N of E

Ans: B

Section: 8–3 Topic: Collisions Type: Numerical

58 You shoot an arrow with a mass of 0.54 kg at 45º above the horizontal. The bow exerts a force of 125 N for 0.65 s. With no air resistance, the maximum height the arrow reaches is

A) 1.2 km B) 5.4 m C) 0.57 km D) 0.29 km E) 0.61 km

Ans: C

Section: 8–3 Topic: Collisions Type: Numerical

59 You shoot an arrow with a mass of 0.54 kg from a bow. The bow exerts a force of 125 N for 0.65 s. The speed of the arrow as it leaves the bow is

A) 0.23 km/s B) 0.10 km/s C) 0.15 km/s D) 0.30 km/s E) 0.27 km/s

Ans: C

Section: 8–3 Topic: Collisions Type: Conceptual

61 A car having a total mass of 2250 kg and traveling at 72 km/h smashes into a tree. The car is stopped in 0.25 s. The driver of the car is not held in place by a seat belt or any other restraining device. Just after the impact but before the driver hits any part of the car, the acceleration of the driver is

A) 80 m/s^2 toward the tree.
B) zero with respect to the tree.
C) 80 m/s^2 away from the tree.
D) $1.8 \times 10^2 m/s^2$ with respect to the car.
E) 37 m/s^2 away from the tree.

Ans: B

Section: 8–3 Topic: Collisions Type: Numerical

62 While in horizontal flight at a speed of 20 m/s, a baseball of mass 0.11 kg is struck by a bat. After leaving the bat, the baseball has a speed of 29 m/s in a direction opposite to its original direction. The magnitude of the impulse given the ball is

A) 0.99 kg · m/s
B) 5.4 kg · m/s
C) 2.2 kg · m/s
D) 3.2 kg · m/s
E) 0.55 kg · m/s

Ans: B

Section: 8–3 Topic: Collisions Type: Conceptual

64 Two balls of equal mass are thrown against a massive wall with equal velocities. The first rebounds with a speed equal to its striking speed, and the second sticks to the wall. The impulse that the first ball transmits to the wall, relative to the second, is

A) twice as great.
B) half as great.
C) the same.
D) four times as great.
E) one-fourth as great.

Ans: A

Section: 8–3 Topic: Collisions Type: Numerical

66 An automatic rifle fires 0.040-kg projectiles at a speed of 800 m/s. If the gunner holding the rifle in her hands can exert an average force of 160 N against the gun, the maximum number of projectiles she can fire in one minute is

A) 15 B) 300 C) 800 D) 4000 E) 48,000

Ans: B

Section: 8–3 Topic: Collisions Type: Numerical

72

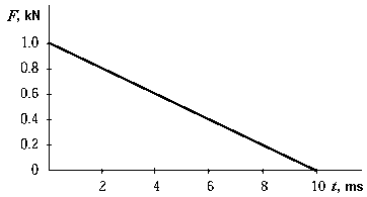

A body is acted on by an impulsive force from time $t = 0$ to time $t = 10$ ms. During this time, the force decreases uniformly from 10^3 N to zero as shown in the graph. The change in momentum of the body during this interval is

A) 10 kg · m/s
B) 5.0 kg · m/s
C) 0.16 kg · m/s
D) 10^5 kg · m/s
E) a value that cannot be determined from this graph.

Ans: B

Section: 8–3 Topic: Collisions Type: Numerical

74 A ball with a mass of 50 g is dropped from a point 5.41 m above a sidewalk. The ball is in contact with the sidewalk for 8.1×10^{-3} s. What is the magnitude of the average force exerted on the ball?

A) 0.12 kN
B) 89 N
C) 9.2 N
D) 0.49 N
E) It cannot be determined without knowing how high the ball bounces.

Ans: E

Section: 8–3 Topic: Collisions Type: Numerical

81 Two billiard balls are traveling to the right with speeds v_1 = +0.5 m/s and v_2 = +0.3 m/s. If $m_1 = 2.5m_2$, calculate the velocity of m_1 after it catches up to and impacts m_2. The speed of m_2 after the collision is +0.55 m/s.

A) −0.35 m/s B) +0.25 m/s C) +0.75 m/s D) +0.35 m/s E) +0.40 m/s

Ans: E

Section: 8–3 Topic: Collisions Type: Numerical

82 A 20-g bullet is fired into a 2.0-kg block of wood placed on a horizontal surface. The bullet stops in the block. The impact moves the block (+ bullet) a distance of 5 m before it comes to rest. If the coefficient of kinetic friction between the block and surface is 0.25, calculate the speed of the block (+ bullet) system immediately after impact.

A) 20 m/s B) 3.5 m/s C) 25 m/s D) 5.0 m/s E) 2.2 m/s

Ans: D

Section: 8–3 Topic: Collisions Type: Numerical

83 A bullet (mass = m_1) is fired at speed V into a block of mass m_2 at rest. If the bullet escapes from the block with only a third of its original speed then the recoil speed of the block is given by

A) $m_1V/ 3m_2$ B) $2m_1V/ 3m_2$ C) $m_2V/ 3m_1$ D) $2m_2V/ 3m_1$ E) $4m_2V/ 9m_1$

Ans: B

Section: 8–3 Topic: Collisions Type: Numerical

94 What is the truck speed in terms of v_c?

A) $0.5v_c$
B) $0.75v_c$
C) $0.87v_c$
D) v_c
E) $1.15v_c$

Ans: C

Section: 8–3 Topic: Collisions Type: Numerical

95 If your speed is 72 km/h, what is the work done by friction in bringing the two vehicles to rest after the collision?

A) -4.0×10^5 J
B) -5.3×10^5 J
C) -8.0×10^5 J
D) -1.3×10^6 J
E) -1.6×10^6 J

Ans: B

Section: 8–4 Topic: The Center-of-Mass Reference Frame Type: Conceptual

98 A woman on a spaceship traveling at a velocity $\vec{V}_0$ in free space runs forward and then suddenly stops. When she stops, the center of mass of the system (that is, the ship and the woman)

A) moves in the same direction as $\vec{V}_0$ with a slight increase in speed.
B) moves in the same direction as $\vec{V}_0$ with a slight decrease in speed.
C) comes to rest if the woman can run fast enough.
D) continues unchanged at a velocity $\vec{V}_0$.
E) moves in the direction that the woman runs until she stops.

Ans: D

Section: 8–4 Topic: The Center-of-Mass Reference Frame Type: Conceptual

99 The center of mass of a system of particles is so defined that

A) it is always at rest.
B) it is always at rest or moving with constant velocity.
C) it always moves in a straight line even if the particles are rotating about it.
D) the kinetic energy of the system is a maximum about any axis through the center of mass.
E) its location depends only on the masses of the particles and their locations.

Ans: E

Section: 8–4 Topic: The Center-of-Mass Reference Frame Type: Factual

100 In a center-of-mass reference frame,

A) the system's kinetic energy is zero.
B) momentum is not conserved.
C) the total momentum is zero.
D) all collisions are elastic.
E) None of these is correct.

Ans: C

Section: 9–1 Topic: Angular Velocity & Angular Acceleration Type: Numerical

6 Starting from rest, a disk rotates with constant angular acceleration. If it takes 10 rev to reach an angular velocity ω, then how many additional revolutions are required to reach an angular velocity 2ω?

A) 10 rev B) 20 rev C) 30 rev D) 40 rev E) 50 rev

Ans: C

Section: 9–1 Topic: Angular Velocity & Angular Acceleration Type: Numerical

7 The London Eye, which is a giant Ferris wheel, has a diameter of 135 m. It revolves at a constant rate and takes 30 minutes to complete one revolution. What is the linear velocity of a rider in a capsule that is located at the perimeter of the wheel?

A) 0.24 m/s
B) 0.47 m/s
C) 3.5 m/s
D) 7.1 m/s
E) None of the above

Ans: A

Section: 9–1 Topic: Angular Velocity & Angular Acceleration Type: Numerical

8 A record turntable rotates through 5.0 rad in 2.8 s as it is accelerated uniformly from rest. What is the angular velocity at the end of that time?

A) 0.60 rad/s B) 0.90 rad/s C) 1.8 rad/s D) 3.6 rad/s E) 14 rad/s

Ans: D

Section: 9–1 Topic: Angular Velocity & Angular Acceleration Type: Conceptual

9 You have a friend who lives in the southern part of the United States, and you live in the northern part. As Earth rotates, your linear velocity is _____ hers, and your angular velocity is _____ hers.

A) greater than; equal to
B) equal to; greater than
C) greater than; less than
D) less than; greater than
E) less than; equal to

Ans: E

Section: 9–1 Topic: Angular Velocity & Angular Acceleration Type: Conceptual

10 A wheel rotates through 6.0 rad in 2.0 s as it is uniformly brought to rest. The initial angular velocity of the wheel before braking began was

A) 0.60 rad/s B) 0.90 rad/s C) 1.8 rad/s D) 6.0 rad/s E) 7.2 rad/s

Ans: D

Section: 9–1 Topic: Angular Velocity & Angular Acceleration Type: Numerical

11 You are whirling a stone on the end of a string in a horizontal circle of radius $R = 0.65$m with a frequency of 4 rev/s when the string breaks. Just after the string breaks, the velocity of the stone is

A) straight down.
B) 32 m/s along a tangent to the circle.
C) 16 m/s along the radius away from the center.
D) 1.0 m/s along the radius toward the center.
E) none of these

Ans: E

Section: 9–1 Topic: Angular Velocity & Angular Acceleration Type: Numerical

12 You are pedaling a bicycle at 9.8 m/s. The radius of the wheels of the bicycle is 51.9cm. The angular velocity of rotation of the wheels is

A) 19 rad/s B) 2.5 rad/s C) 4.5 rad/s D) 3.0 rad/s E) 6.3 rad/s

Ans: D

Section: 9–1 Topic: Angular Velocity & Angular Acceleration Type: Conceptual

18 A body that moves with a constant speed in a circle

A) experiences no acceleration.
B) undergoes no change in velocity.
C) has no resultant force acting on it.
D) has no work done on it.
E) is described by all of these.

Ans: D

Section: 9–1 Topic: Angular Velocity & Angular Acceleration Type: Conceptual

19 When an object is moving in a circle at constant speed, its acceleration is

A) constantly increasing.
B) constant in direction.
C) zero.
D) constant in magnitude.
E) constant in both magnitude and direction.

Ans: D

Section: 9–1 Topic: Angular Velocity & Angular Acceleration Type: Numerical

21 A turntable rotating at 8.0 rad/s slows to a stop in 10 s. If the acceleration is constant, the angle through which the turntable rotates in the 10 s is

A) 0.80 rad B) 0.40 rad C) 40 rad D) 80 rad E) 16 rad

Ans: C

Section: 9–1 Topic: Angular Velocity & Angular Acceleration Type: Numerical

23 You give an orbiting satellite a command to rotate through an angle given by

$$\theta = at + bt^2 - ct^4$$

where *a, b,* and *c* are constants and θ is in radians if *t* is in seconds. What is the angular acceleration of this satellite at time *t*?

A) at B) $a + b - c$ C) -12 D) $2b - 12ct^2$ E) zero

Ans: D

Section: 9–1 Topic: Angular Velocity & Angular Acceleration Type: Numerical

24 The angular acceleration of the flywheel of a generator is given by

$$\alpha(t) = 6bt - 12ct^2$$

where *b* and *c* are constants and α is in rad/s^2 provided *t* is in seconds. If the initial angular velocity is taken to be ω_0, the angular velocity at time *t* is given by

A) $\omega_0 + 6bt^2 - 12ct^3$

B) $6b - 24ct$

C) $3bt^2 - 4ct^3 + \omega_0$

D) $3bt^2 - 4ct^3$

E) $6b - 24ct + \omega_0$

Ans: C

Section: 9–1 Topic: Angular Velocity & Angular Acceleration Type: Numerical

25

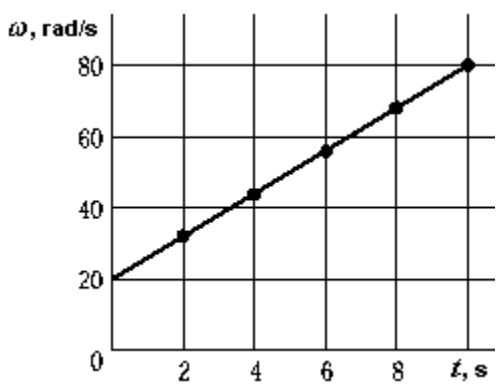

The data used to construct the graph were taken from the tachometer of an airplane. The angular acceleration during the 10 s interval was

A) 3.0 rad/s^2 B) 6.0 rad/s^2 C) 8.0 rad/s^2 D) 20 rad/s^2 E) 38 rad/s^2

Ans: B

Section: 9–1 Topic: Angular Velocity & Angular Acceleration Type: Numerical

29 A 2.0-kg mass is attached to the end of a 5.0-m rope. The mass moves in a circular path on a horizontal frictionless surface. If the breaking strength of the rope is 40 N, the maximum translational speed with which you can swing the mass without breaking the rope is approximately

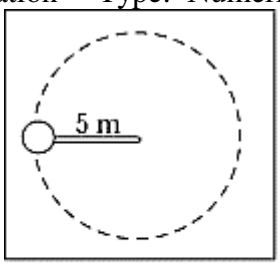

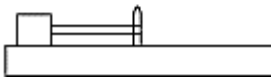

A) 3.2 m/s B) 4.0 m/s C) 10 m/s D) 20 m/s E) 0.20 km/s
Ans: C

Section: 9–1 Topic: Angular Velocity & Angular Acceleration Type: Numerical

30

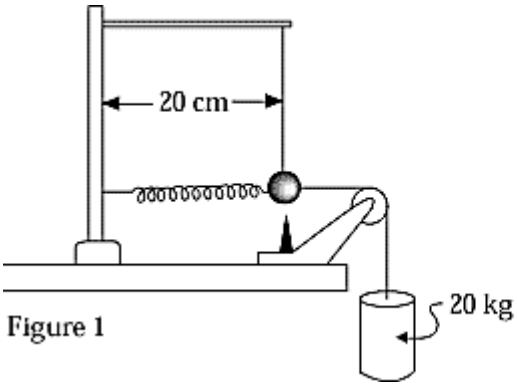

Figure 1

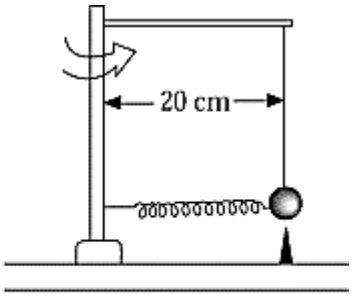

Figure 2

A 2-kg sphere attached to an axle by a spring is displaced from its rest position to a radius of 20 cm from the axle centerline by a standard mass of 20 kg, as in Figure 1. The same 2-kg sphere is also displaced 20 cm from the axle centerline, as in Figure 2, when the sphere is rotated at a speed of approximately
A) 4.4 m/s B) 9.8 m/s C) 14 m/s D) 98 m/s E) 0.44 km/s
Ans: A

Section: 9–1 Topic: Angular Velocity & Angular Acceleration Type: Numerical

32 A 5×10^{-6}-kg dot of paint on the side of a rotating cylinder flies off when the angular speed of the cylinder reaches 5×10^{3} rad/s. The spin axis of the cylinder is vertical and its radius is 0.04 m. The force of adhesion between the paint and the surface is approximately
A) 1 N B) 1 mN C) 5 mN D) 5 kN E) 5 N
Ans: E

Section: 9–1 Topic: Angular Velocity & Angular Acceleration Type: Numerical

33 A 0.3-kg object is being whirled in a horizontal circle at the end of a 1.5 m long string. If the string breaks when the number of revolutions per minute, rpm = 200, then find the maximum tension in the string.

A) 2.0×10^2 N B) 59 N C) 7.0×10^5 N D) 9.0 N E) 88 N

Ans: A

Section: 9–1 Topic: Angular Velocity & Angular Acceleration Type: Numerical

34 A wheel starting from rest has a constant angular acceleration. After 3.0 s the angular velocity of the wheel is 7.5 rad/s. This same angular acceleration continues for a further 7.0 s after which it drops suddenly to zero. In the first 20.0 s how many revolutions does the wheel make?

A) 20 B) 40 C) 60 D) 80 E) 100

Ans: C

Section: 9–1 Topic: Angular Velocity & Angular Acceleration Type: Numerical

35 The time period for the rotation of the conical pendulum moving in a horizontal circle (bob mass = M, string length L, and vertical half angle θ; see figure) is given by the expression:

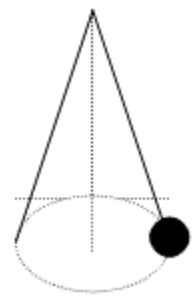

A) $2\pi \times \{L\cos\theta / g\}^{1/2}$

B) $2\pi \times \{L\sin\theta / g\}^{1/2}$

C) $2\pi \times L\cos\theta / g$

D) $2\pi \times L\sin\theta / g$

E) $\{2\pi \times L\cos\theta / g\}^{1/2}$

Ans: A

Section: 9–1 Topic: Angular Velocity & Angular Acceleration Type: Numerical

37 The information on a compact disc is scanned by a laser initially at a radius of 2.4 cm and then out to a maximum of 6.0 cm. Because the dimensions of the pit information remains constant with radius the disk motor adjusts so that the tangential velocity remains a constant. What is the ratio of the inner to outer rotational frequencies?

A) 0.16 B) 6.3 C) 1.0 D) 2.5 E) 0.40

Ans: D

Section: 9–2 Topic: Rotational Kinetic Energy Type: Numerical

40 A solid sphere ($I = 0.4MR^2$) of radius 0.06 m and mass 0.50 kg rolls without slipping 14m down a 30º inclined plane. At the bottom of the plane, the linear velocity of the center of mass of the sphere is approximately

A) 3.5 m/s B) 3.9 m/s C) 8.7 m/s D) 18 m/s E) 9.9 m/s

Ans: E

Section: 9–2 Topic: Rotational Kinetic Energy Type: Numerical

42 A cylinder ($I = \frac{1}{2}mR^2$) rolls along a level floor with a speed v. The work required to stop this cylinder is

A) $\frac{1}{4}\,mv^2$ B) $\frac{1}{2}\,mv^2$ C) $\frac{3}{4}\,mv^2$ D) mv^2 E) $1.25mv^2$

Ans: C

Section: 9–2 Topic: Rotational Kinetic Energy Type: Numerical

45 The disc brakes of a high performance car are often made of carbon fiber instead of iron, thereby reducing the mass. If both types of discs are of the same size and shape, and each iron disc has a mass of 4 kg and each carbon disc has a mass of 1 kg, what is the reduction in rotational kinetic energy at 72 km/h if all the four iron discs in the car are replaced with carbon discs?

A) 300 J
B) 400 J
C) 800 J
D) 1200 J
E) 1600 J

Ans: D

Section: 9–2 Topic: Rotational Kinetic Energy Type: Numerical

47 A body of mass m is whirled at a constant angular velocity on the end of a string of length R. To double the kinetic energy of the body as it whirls while maintaining the angular velocity, the length of the string must be changed to

A) $2R$ B) $R\sqrt{2}$ C) $R/2$ D) $4R$ E) $R/\sqrt{2}$

Ans: B

Section: 9–2 Topic: Rotational Kinetic Energy Type: Numerical

49 A hoop of mass 50 kg rolls without slipping. If the center-of-mass of the hoop has a translational speed of 4.0 m/s, the total kinetic energy of the hoop is

A) 0.20 kJ B) 0.40 kJ C) 1.1 kJ D) 3.9 kJ E) None of these is correct.

Ans: E

Section: 9–2 Topic: Rotational Kinetic Energy Type: Numerical

50 A thin solid disk of radius $R = 0.5$ m and mass $M = 2.0$ kg is rolling without slipping on a horizontal surface with a linear speed $v = 5.0$ m/s. The disk now rolls without slipping up an inclined plane that is at an angle of 60 degrees to the vertical. Calculate the maximum height that the disk rolls up the incline.

A) 5.1 m B) 2.6 m C) 2.9 m D) 3.1 m E) 1.3 m

Ans: B

Section: 9–3 Topic: Calculating the Moment of Inertia Type: Numerical

52 Four 50-g point masses are at the corners of a square with 20-cm sides. What is the moment of inertia of this system about an axis perpendicular to the plane of the square and passing through its center?

A) 1.0×10^{-3} kg · m^2
B) 4.0×10^{-3} kg · m^2
C) 2.0×10^{-3} kg · m^2
D) 8.0×10^{-3} kg · m^2
E) 2.8×10^{-3} kg · m^2

Ans: B

Section: 9–3 Topic: Calculating the Moment of Inertia Type: Numerical

53 The moment of inertia of a slim rod of mass m and length L about a transverse axis through one end is $mL^2/3$. The moment of inertia of such a rod about a transverse axis through the rod at a distance $L/3$ from one end is

A) $mL^2/36$ B) $7mL^2/36$ C) $mL^2/9$ D) $2mL^2/9$ E) $4mL^2/9$

Ans: C

Section: 9–3 Topic: Calculating the Moment of Inertia Type: Numerical

57 The moment of inertia of a set of dumbbells, considered as two mass points m separated by a distance $2L$ about the axis AA, is

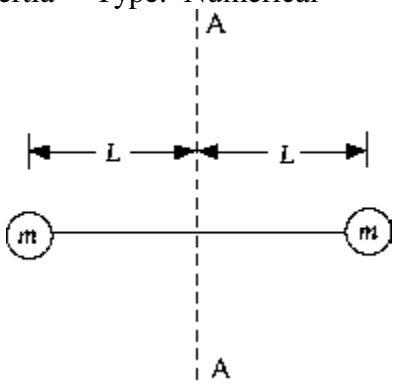

A) mL^2 B) $\frac{1}{2}mL^2$ C) $2mL^2$ D) $\frac{1}{4}mL^2$ E) $4mL^2$

Ans: C

Section: 9–3 Topic: Calculating the Moment of Inertia Type: Numerical

58 A homogeneous solid cylinder of mass m, length L, and radius R rotates about an axis through point P, which is parallel to the cylinder axis. If the moment of inertia about the cylinder axis is $\frac{1}{2}mR^2$, the moment of inertia about the axis through P is

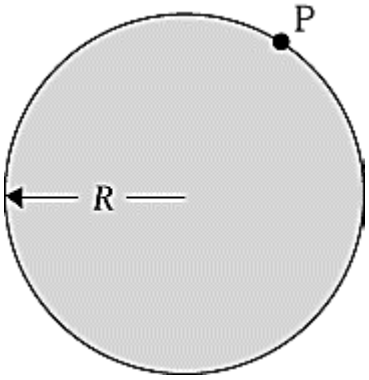

A) $0.4mR^2$ B) $\frac{1}{2}mR^2$ C) $2/3\ mR^2$ D) mR^2 E) $1.5mR^2$

Ans: E

Section: 9–3 Topic: Calculating the Moment of Inertia Type: Numerical

65 A uniform disk ($I_o = ½\ mR^2$) of mass m and radius R is suspended from a point on its rim. The moment of inertia of the disk about an axis perpendicular to the disk through the pivot point is

A) $½\ mR^2$ B) mR^2 C) $1.5mR^2$ D) $2mR^2$ E) $2mR^2/3$

Ans: C

Section: 9–4 Topic: Newton's Second Law for Rotation Type: Numerical

67 A disk with a radius of 1.5 m whose moment of inertia is 34 kg · m^2 is caused to rotate by a force of 160 N tangent to the circumference. The angular acceleration of the disk is approximately

A) 0.14 rad/s^2 B) 0.23 rad/s^2 C) 4.4 rad/s^2 D) 7.1 rad/s^2 E) 23 rad/s^2

Ans: D

Section: 9–4 Topic: Newton's Second Law for Rotation Type: Conceptual

69 A disc is free to rotate about an axis. A force applied at a distance d from the axis causes an angular acceleration α. What angular acceleration is produced if the same force is applied a distance $2d$ from the axis?

A) α B) 2α C) $\alpha/2$ D) 4α E) $\alpha/4$

Ans: B

Section: 9–4 Topic: Newton's Second Law for Rotation Type: Conceptual

70 A bicycle wheel, a hollow sphere, and a solid sphere each have the same mass and radius. They each rotate about an axis through their centers. Which has the greatest moment of inertia and which has the least?

A) The wheel has the greatest; the solid sphere has the least.
B) The wheel has the greatest; the hollow sphere has the least.
C) The hollow sphere has the greatest; the solid sphere has the least.
D) The hollow sphere has the greatest; the wheel has the least.
E) The solid sphere has the greatest; the hollow sphere has the least.

Ans: A

Section: 9–4 Topic: Newton's Second Law for Rotation Type: Numerical

71 Water is drawn from a well in a bucket tied to the end of a rope whose other end wraps around a cylinder of mass 50 kg and diameter 25 cm. As you turn this cylinder with a crank, the rope raises the bucket. If the mass of a bucket of water is 20 kg, what torque must you apply to the crank to raise the bucket of water at a constant speed?

A) 24 N · m B) 2.5 N · m C) 80 N · m D) 2.4×10^3 N · m E) 49 N · m

Ans: A

Section: 9–4 Topic: Newton's Second Law for Rotation Type: Numerical

73 A disc-shaped grindstone of mass 3.0 kg and radius 8.0 cm is spinning at 600 rev/min. After the power is shut off, a man continues to sharpen his axe by holding it against the grindstone until it stops 10 s later. What is the average torque exerted by the axe on the grindstone?

A) 9.6 mN · m
B) 0.12 N · m
C) 0.75 N · m
D) 0.60 kN · m
E) 0.060 N · m

Ans: E

Section: 9–4 Topic: Newton's Second Law for Rotation Type: Numerical

74 A uniform stick 1 m long is placed horizontally on the ground along an east–west axis. A force of 1.0 N is applied to the center of the stick in a direction 30º west of north. The torque exerted by the force relative to the east end of the stick is

A) zero.
B) 0.25 m, clockwise.
C) 0.43 m, clockwise.
D) 0.25 m, counterclockwise.
E) 0.43 m, counterclockwise.

Ans: C

Section: 9–4 Topic: Newton's Second Law for Rotation Type: Numerical

75 What constant torque, in the absence of friction, must be applied to a wheel to give it an angular velocity of 50 rad/s if it starts from rest and is accelerated for 10 s? The moment of inertia of the wheel about its axle is 9.0 kg · m^2.

A) 4.5 N · m B) 9.0 N · m C) 45 N · m D) 30 N · m E) 60 N · m

Ans: C

Section: 9–4 Topic: Newton's Second Law for Rotation Type: Numerical

76 A wheel slows from 20 rad/s to 12 rad/s in 5 s under the influence of a constant frictional torque. In these 5 s, the wheel turns through an angle of

A) 2.4 rad B) 43 rad C) 60 rad D) 80 rad E) 100 rad

Ans: D

Section: 9–4 Topic: Newton's Second Law for Rotation Type: Numerical

81 A thin, massless string is wrapped around a 0.25m radius grindstone supported by bearings that produce negligible frictional torque. A steady tension of 20 N in the string causes the grindstone to move from rest to a speed of 60 rad/s in 12s. The moment of inertia of the grindstone is

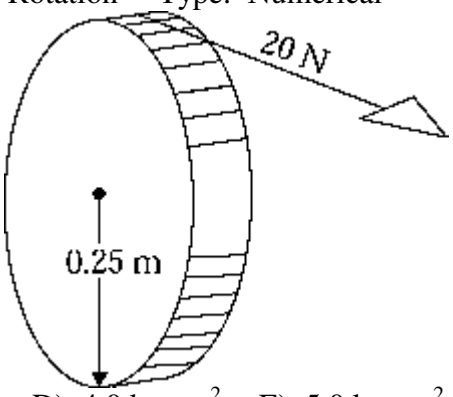

A) 1.0 kg · m^2 B) 2.0 kg · m^2 C) 3.0 kg · m^2 D) 4.0 kg · m^2 E) 5.0 kg · m^2

Ans: A

Section: 9–5 Topic: Applications of Newton's Second Law... Type: Conceptual

86 Two masses M and m ($M > m$) are hung over a disc ($I_{disc} = \frac{1}{2}M'R^2$) and are released so that they accelerate. If T_1 is the tension in the cord on the left and T_2 is the tension in the cord on the right, then

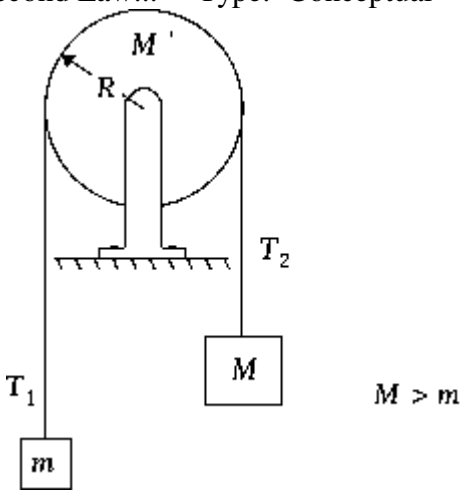

A) $T_1 = T_2$ B) $T_2 > T_1$ C) $T_2 < T_1$ D) $T_2 = Mg$ E) $T_2 = Mg/m$

Ans: B

Section: 9–5 Topic: Applications of Newton's Second Law... Type: Numerical

88

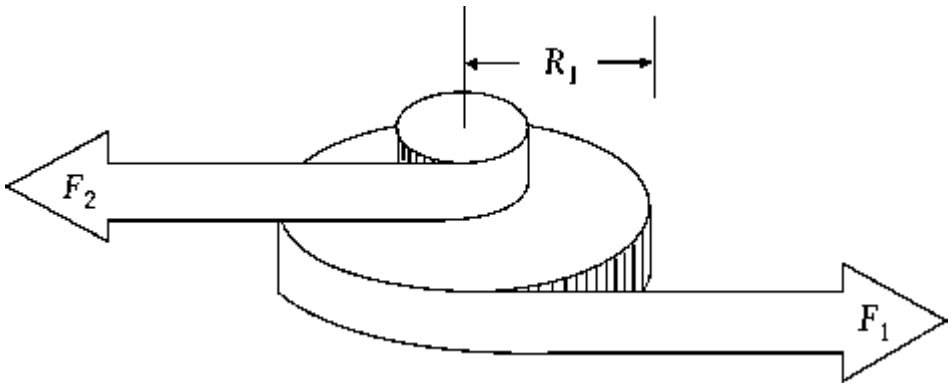

A wheel of radius R_1 has an axle of radius $R_2 = \frac{1}{4}R_1$. If a force F_1 is applied tangent to the wheel, a force F_2, applied tangent to the axle that will keep the wheel from turning, is equal to

A) $F_1/4$ B) F_1 C) $4F_1$ D) $16F_1$ E) $F_1/16$

Ans: C

Section: 9–5 Topic: Applications of Newton's Second Law... Type: Numerical

89

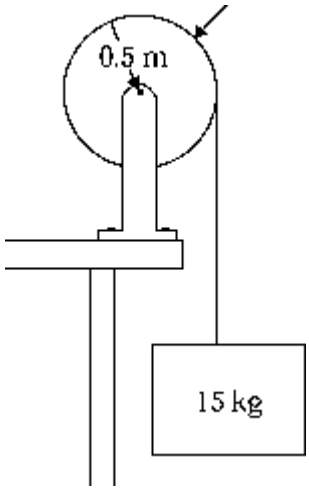

The moment of inertia of the wheel in the figure is 0.50 kg · m^2, and the bearing is frictionless. The acceleration of the 15-kg mass is approximately

A) 9.8 m/s^2 B) 8.7 m/s^2 C) 74 m/s^2 D) 16 m/s^2 E) 0.53 m/s^2

Ans: B

Section: 9–5 Topic: Applications of Newton's Second Law... Type: Numerical

91 In the figure, the rotational inertia of the wheel and axle about the center is 12.0 kg · m^2, the constant force F is 39.2 N, and the radius r is 0.800 m. The wheel starts from rest. When the force has acted through 2.00 m, the rotational velocity ω acquired by the wheel due to this force will be

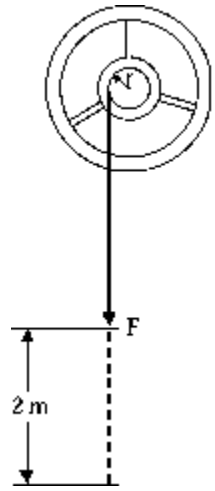

A) 1.26 rad/s B) 3.33 rad/s C) 3.61 rad/s D) 6.24 rad/s E) 10.3 rad/s
Ans: C

Section: 9–5 Topic: Applications of Newton's Second Law... Type: Numerical

93 A solid cylinder of mass m = 3 kg and radius r = 12 cm is initially rotating about its central axis with angular frequency ω = 25 radians/s. How many revolutions does it make after a retarding force of 0.5 N is applied to the outer surface?
A) 0.018 rev B) 0.11 rev C) 0.036 rev D) 0.0090 rev E) 0.072 rev
Ans: A

Use the figure on the right to answer the next two problems.

A mass m = 0.5 kg is hung from a pulley with moment of inertia I = 0.20kg·m^2 and radius R = 10cm. There is friction in the pulley. The mass is dropped from rest, and after 2s it traveled 4m.

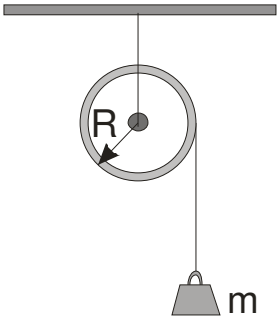

Section: 9–6 Topic: Rolling Objects Type: Numerical

98 Assume that all of the mass of a bicycle wheel is concentrated at its rim. Such a wheel of mass 1.2 kg and radius 30 cm starts from rest at the top of a hill 100 m long and inclined at 20° to the horizontal. What will be the speed of the wheel at the bottom of the hill if it rolls without slipping?
A) 21 m/s B) 26 m/s C) 15 m/s D) 33 m/s E) 37 m/s
Ans: C

Section: 9–6 Topic: Rolling Objects Type: Conceptual

99 Starting from rest at the same time, a coin and a ring roll down an incline without slipping. Which reaches the bottom first?

A) The ring reaches the bottom first.
B) The coin reaches the bottom first.
C) They arrive at the bottom simultaneously.
D) The winner depends on the relative masses of the two.
E) The winner depends on the relative diameters of the two.

Ans: B

Section: 9–6 Topic: Rolling Objects Type: Conceptual

100 For a hoop (ring) of mass M and radius R that is rolling without slipping, which is greater, its translational or its rotational kinetic energy?

A) Its translational kinetic energy is greater.
B) Its rotational kinetic energy is greater.
C) They are equal.
D) The answer depends on the radius.
E) The answer depends on the mass.

Ans: C

Section: 9–6 Topic: Rolling Objects Type: Conceptual

101 For a disc of mass M and radius R that is rolling without slipping, which is greater, its translational or its rotational kinetic energy?

A) Its translational kinetic energy is greater.
B) Its rotational kinetic energy is greater.
C) They are equal.
D) The answer depends on the radius.
E) The answer depends on the mass.

Ans: A

Section: 9–6 Topic: Rolling Objects Type: Conceptual

102 A wheel on a car is rolling without slipping along level ground. The speed of the car is 36 m/s. The wheel has an outer diameter of 50 cm. The speed of the top of the wheel is

A) 36 m/s B) 3.6 m/s C) 72 m/s D) 18 m/s E) 98 m/s

Ans: C

Section: 9–6 Topic: Rolling Objects Type: Conceptual

106 A solid cylinder, a hollow cylinder, and a square block of equal masses are released at the top of an inclined plane. The cylinders roll down and the block slides down, all with negligible frictional losses. In what order will they arrive at the bottom?

A) solid cylinder, hollow cylinder, block
B) hollow cylinder, solid cylinder, block
C) block, hollow cylinder, solid cylinder
D) block, solid cylinder, hollow cylinder
E) all at the same instant

Ans: D

Section: 10–2 Topic: Torque and Angular Momentum Type: Conceptual

11 A wheel is set spinning and is then hung by a rope placed at one end of the axle. If the wheel is spinning as shown, the angular momentum of the wheel could be represented by vector

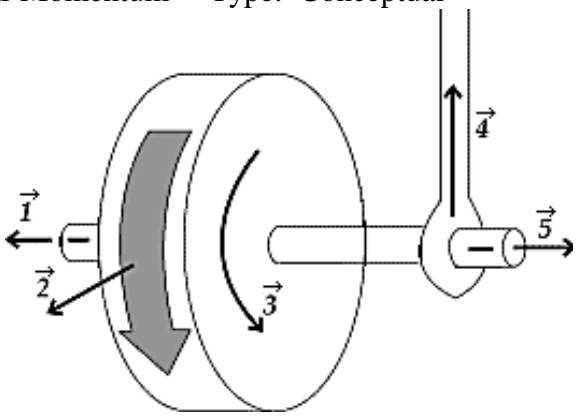

A) $\vec{1}$ B) $\vec{2}$ C) $\vec{3}$ D) $\vec{4}$ E) $\vec{5}$
Ans: E

Section: 10–2 Topic: Torque and Angular Momentum Type: Numerical

14 The angular momentum of a flywheel about its axis is 925 kg · m^2/s. If its moment of inertia about the same axis is 2.50 kg · m^2, its angular velocity is
A) 370 rev/min B) 62 rev/min C) 36 rev/min D) 2210 rad/s E) 370 rad/s
Ans: E

Section: 10–2 Topic: Torque and Angular Momentum Type: Numerical

17 Let us compare the angular momentum of Mars (L_M) in its orbit around the Sun to that of Earth (L_E). The mean orbital speed of Mars is 24 km/s, whereas that of Earth is 30 km/s. The mean orbital radius of Mars is 228×10^6 km, whereas that of Earth is 150×10^6 km. If the mass of Mars is 11% that of Earth, calculate the ratio L_M / L_E.
A) 0.21 B) 0.090 C) 7.7 D) 11 E) 0.13
Ans: E

Section: 10–2 Topic: Torque and Angular Momentum Type: Conceptual

18 If the angular momentum of a system is constant, which of the following statements must be true?
A) No torque acts on any part of the system.
B) A constant torque acts on each part of the system.
C) Zero net torque acts on each part of the system.
D) A constant external torque acts on the system.
E) Zero net torque acts on the system.
Ans: E

Section: 10–2 Topic: Torque and Angular Momentum Type: Conceptual

19 The angular momentum of a system is conserved only if

A) the angular velocity is a function of time.
B) the sum of the external torques equals the sum of the internal torques.
C) the moment of inertia of the system is constant.
D) the sum of the external torques is zero.
E) the sum of the internal torques is zero.

Ans: D

Section: 10–2 Topic: Torque and Angular Momentum Type: Numerical

20 The angular momentum of a rotating object is initially $\vec{L}_i = 2\hat{i} + 4\hat{j}$ and 2s later it is $\vec{L}_f = 3\hat{i} + 8\hat{j}$. The units are in kg·m^2/s. The torque that produces the change in angular momentum is

A) $-0.5\,N \cdot m\,\hat{i} - 2\,N \cdot m\,\hat{j}$
B) $0.5\,N \cdot m\,\hat{i} + 2\,N \cdot m\,\hat{j}$
C) $-1\,N \cdot m\,\hat{i} - 4\,N \cdot m\,\hat{j}$
D) $1\,N \cdot m\,\hat{i} + 4\,N \cdot m\,\hat{j}$
E) none of the above

Ans: B

Section: 10–2 Topic: Torque and Angular Momentum Type: Numerical

21 The velocity a planet of mass m with circular orbit is given by $\vec{v} = v_o(-\sin\omega t\,\hat{i} + \cos\omega t\,\hat{j})$ where v_o in m/s is a constant, and ω is the angular velocity. Its position vector is $\vec{r} = r_o(\cos\omega t\,\hat{i} + \sin\omega t\,\hat{j})$ .The angular momentum of the planet about the center of the orbit is

A) $-mv_o r_o\,\hat{k}$
B) $mv_o r_o\,\hat{k}$
C) $mv_o r_o\,(2\sin\omega t\cos\omega t)\hat{k}$
D) $-mv_o r_o\,(2\sin\omega t\cos\omega t)\hat{k}$
E) none of the above

Ans: B

Section: 10–2 Topic: Torque and Angular Momentum Type: Numerical

22 A constant torque of 15 N · m acts for 3.0 s on a system of mass 2.0 kg. The change in angular momentum of the system during this period of time is

A) 5.0 kg · m^2/s
B) 7.5 kg · m^2/s
C) 10 kg · m^2/s
D) 23 kg · m^2/s
E) 45 kg · m^2/s

Ans: E

Section: 10–2 Topic: Torque and Angular Momentum Type: Conceptual

25 Two balls, each of mass m, are attached to the ends of a rod of length l and mass M. The system is then rotated about a frictionless pivot located at the center of mass with angular velocity ω. The angular momentum of the system in vector form about the pivot is

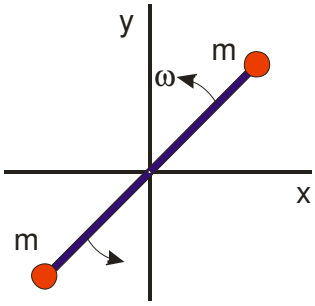

A) $\frac{1}{2}(m+\frac{1}{6}M)\omega l^2\hat{k}$

B) $(m+\frac{1}{12}M)\omega l^2\hat{k}$

C) $(2m+\frac{1}{12}M)\omega l^2\hat{k}$

D) $-(m+\frac{1}{12}M)\omega l^2\hat{k}$

E) none of the above

Ans: A

Section: 10–2 Topic: Torque and Angular Momentum Type: Numerical

27 A disc-shaped grindstone of mass 3.0 kg and radius 8.0 cm is spinning at 600 rev/min. After the power is shut off, a man continues to sharpen his axe by holding it against the grindstone until it stops 10 s later. What was the stone's initial kinetic energy when the power was turned off?

A) 19 J B) 3.8×10^{-3} J C) 4.8×10^{-5} J D) 1.9×10^{-3} J E) 2.4×10^{-2} J

Ans: A

Section: 10–2 Topic: Torque and Angular Momentum Type: Conceptual

29 The angular momentum vector for a spinning wheel lies along its axle and is pointed east. To make this vector point south, it is necessary to exert a force on the east end of the axle in which direction?

A) up B) down C) north D) south E) east

Ans: A

Section: 10–3 Topic: Conservation of Angular Momentum Type: Conceptual

32 A woman sits on a spinning piano stool with her arms folded. When she extends her arms, which of the following occurs?

A) She increases her moment of inertia, thereby increasing her angular speed.
B) She increases her moment of inertia, thereby decreasing her angular speed.
C) She decreases her moment of inertia, thereby increasing her angular speed.
D) She decreases her moment of inertia, thereby decreasing her angular speed.
E) Both her moment of inertia and her angular speed remain constant.

Ans: B

Section: 10–3 Topic: Conservation of Angular Momentum Type: Conceptual

33 A man turns with an angular velocity on a rotating table, holding two equal masses at arms' length. If he drops the two masses without moving his arms, his angular velocity

A) decreases.
B) remains the same.
C) increases.
D) increases as the angular velocity of the masses decreases.
E) decreases as the angular velocity of the masses increases.

Ans: B

Section: 10–3 Topic: Conservation of Angular Momentum Type: Numerical

35 A woman sits on a stool that can turn friction-free about its vertical axis. She is handed a spinning bicycle wheel that has angular momentum $\vec{L}_0$ and she turns it over (that is, through 180º). She thereby acquires an angular momentum of magnitude

A) 0 B) $\frac{1}{2}\vec{L}_0$ C) $\vec{L}_0$ D) $2\vec{L}_0$ E) $4\vec{L}_0$

Ans: D

Section: 10–3 Topic: Conservation of Angular Momentum Type: Numerical

38 A merry-go-round with a moment of inertia of 6.78×10^3 kg · m^2 is coasting at 2.20 rad/s. When a 72.6-kg man steps onto the rim, the angular velocity decreases to 2.0 rad/s. The radius of the merry-go-round is

A) 3.06 m B) 3.66 m C) 4.27 m D) 4.88 m E) 5.49 m

Ans: A

Section: 10–3 Topic: Conservation of Angular Momentum Type: Numerical

40 A hoop rotates about an axis through its center with an angular velocity of 40.0 rad/s. If the rotational kinetic energy of the hoop is 400 J, its angular momentum is

A) 800 kg · m^2/s
B) 400 kg · m^2/s
C) 200 kg · m^2/s
D) 20 kg · m^2/s
E) 5 kg · m^2/s

Ans: D

Section: 10–3 Topic: Conservation of Angular Momentum Type: Numerical

44 A disc with moment of inertia $I_1 = 40\ kg{\cdot}m^2$ and angular velocity $\omega_1 = 20$ rad/s is dropped on to a stationary second disc along the axis of rotation. The second disc has moment of inertia $I_2 = 60\ kg{\cdot}m^2$. What is the angular velocity of the two discs?

A) 4 rad/s
B) 6 rad/s
C) 8 rad/s
D) 12 rad/s
E) 20 rad/s

Ans: C

Section: 10–3 Topic: Conservation of Angular Momentum Type: Numerical

46 A wheel of moment of inertia $0.136\ kg \cdot m^2$ is spinning with an angular speed of 5000 rad/s. A torque is applied about an axis perpendicular to the spin axis. If the applied torque has a magnitude of $67.8\ N \cdot m$, the angular velocity of precession will be

A) 1.00 rad/s B) 0.100 rad/s C) 10.0 rad/s D) 100 rad/s E) 1000 rad/s

Ans: B

Section: 10–3 Topic: Conservation of Angular Momentum Type: Numerical

56 A spinning bicycle wheel with a loaded rim (essentially a hoop) is supported by a line at one end of its axle. The radius of the wheel is 0.305 m, and the wheel has a mass of 3.63 kg. It is spinning at 80.0 rad/s, and the center of mass is 15.2 cm from the point of support. The angular velocity of precession is

A) 0.0125 rad/s
B) 0.0318 rad/s
C) 0.200 rad/s
D) 0.100 rad/s
E) 0.625 rad/s

Ans: C

Section: 10–3 Topic: Conservation of Angular Momentum Type: Numerical

58 Consider Earth as a uniform sphere of diameter 12.7×10^6 m, with a mass of the 5.98×10^{30} kg, and a rotational period of 1 day. If Earth suddenly had a diameter of half this value without any loss of mass, calculate the new period of rotation.

A) 0.5 days B) 2.0 days C) 0.25 days D) 4.0 days E) 1.4 days

Ans: C

Chapter 11

Section: 11–1 Topic: Kepler's Laws Type: Numerical

2 The moon has a period of 27.3 d and is an average distance from Earth of 3.84×10^5km. A communications satellite is placed in an Earth orbit at 4.23×10^4 km from the center of Earth. What is the period of this satellite?

A) 0.87 h B) 1.0 d C) 3.0 d D) 6.3 d E) 8.0 h

Ans: B

Section: 11–1 Topic: Kepler's Laws Type: Numerical

3 In a distant galaxy, a planet orbits its sun at a distance of 1.8×10^{12} m with a period of 10^8s. A second planet orbits the same sun at a distance of 9×10^{11} m. What is the period of the second planet?

A) 5×10^7 s B) 2×10^8 s C) 0.35×10^8 s D) 2.8×10^8 s E) 5×10^8 s

Ans: C

Section: 11–1 Topic: Kepler's Laws Type: Conceptual

4 If the mass of a satellite is doubled while the radius of its orbit remains constant, the speed of the satellite is

A) increased by a factor of 8.
B) increased by a factor of 2.
C) not changed.
D) reduced by a factor of 8.
E) reduced by a factor of 2.

Ans: C

Section: 11–2 Topic: Newton's Law of Gravity Type: Conceptual

13 Which of the following statements is true?

A) There is no point in the universe where gravity is precisely zero.
B) It is possible to find a point in the universe where gravity from different astronomical objects cancels so it is precisely zero.
C) Gravity can give rise to a repulsive force.
D) Gravity is a nonconservative force.
E) None of the above is true.

Ans: A

Section: 11–2 Topic: Newton's Law of Gravity Type: Factual

14 Kepler's second law of planetary motion states that the radius vector from the sun to a planet sweeps out equal areas in equal times. This relationship is a consequence of which of the following conservation principles?

A) speed
B) linear momentum
C) angular momentum
D) mechanical energy
E) potential energy

Ans: C

Section: 11–2 Topic: Newton's Law of Gravity Type: Conceptual

20

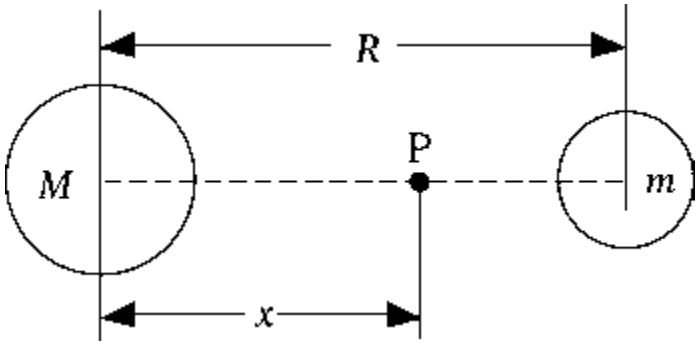

Two planets have masses M and m, and the ratio $M/m = 25$. The distance between the planets is R. The point P, is between the planets as shown, and the distance between M and P is x. At P the gravitational forces on an object due to M and m are equal in magnitude. The value of x is

A) $5R/6$ B) $25R/36$ C) $R/25$ D) $6R/5$ E) None of these is correct.

Ans: A

Section: 11–2 Topic: Newton's Law of Gravity Type: Factual

24 In the SI system, the units for gravitational field are

A) $kg \cdot m/s^2$ B) m/s^2 C) kg^2/m^2 D) N/m E) None of these is correct.

Ans: B

Section: 11–2 Topic: Newton's Law of Gravity Type: Numerical

26 If the mass of Earth is 6×10^{24} kg, the mass of the moon 7×10^{22} kg, the radius of the moon's orbit 4×10^8 m, and the value of the gravitational constant 6×10^{-11} $N \cdot m^2/kg^2$, the force between Earth and the moon is approximately

A) 5×10^4 N B) 2×10^{20} N C) 3×10^{50} N D) 7×10^{30} N E) 3×10^{28} N

Ans: B

Section: 11–2 Topic: Newton's Law of Gravity Type: Numerical

30 A planet is made of two distinct materials. From the core to R/2, the density of the material is 4000 kg/m^3, and from R/2 to R the density is 3000 kg/m^3. What is the gravity at the surface of the planet if R = 5000 km?

A) 0.699 m/s^2
B) 3.66 m/s^2
C) 4.19 m/s^2
D) 4.38 m/s^2
E) 4.99 m/s^2

Ans: D

Section: 11–2 Topic: Newton's Law of Gravity Type: Numerical

33 If a planet has a mass twice that of Earth and a radius four times that of Earth, the ratio of the acceleration due to gravity on the planet to that on Earth is

A) 1/8 B) 1/2 C) 1/16 D) 2/1 E) 12/1

Ans: A

Section: 11–2 Topic: Newton's Law of Gravity Type: Numerical

35 The mean radius of Earth is about 6.436×10^6 m. A satellite in a circular orbit 3.20×10^6 m above the surface of Earth has an acceleration of approximately

A) 39.2 m/s^2 B) 22.1 m/s^2 C) 14.2 m/s^2 D) 6.54 m/s^2 E) 4.36 m/s^2

Ans: E

Section: 11–2 Topic: Newton's Law of Gravity Type: Numerical

36 When two masses are a distance R apart, each exerts a force of magnitude F on the other. When the distance between them is changed to $4R$, the force is changed to

A) $16F$ B) $4F$ C) $F/2$ D) $F/4$ E) $F/16$

Ans: E

Section: 11–2 Topic: Newton's Law of Gravity Type: Numerical

44 Two satellites, one in geosynchronous orbit (T = 24 hrs) and one with a period of 12 hrs, are orbiting Earth. How many times larger than the radius of Earth is the distance between the orbits of the two satellites. (Mass(Earth) = 5.98×10^{24} kg, $G = 6.67 \times 10^{-11}$ N·m^2, g = 9.81 m/s^2, radius(Earth) = 6.38×10^6 m)

A) 0.51 B) 2.0 C) 6.6 D) 5.7 E) none of the above

Ans: A

Section: 11–3 Topic: Gravitational Potential Energy Type: Numerical

51 Suppose a rocket is fired vertically upward from the surface of Earth with one-half of the escape speed. How far from the center of Earth will it reach before it begins to fall back? (Let g = 9.8 m/s^2 and R_E = 6370 km.)

A) 1.3×10^4 km
B) 8.5×10^3 km
C) 9.6×10^3 km
D) 2.6×10^4 km
E) 1.9×10^4 km

Ans: B

Section: 11–3 Topic: Gravitational Potential Energy Type: Numerical

53 A satellite whose mass is 1000 kg is in a circular orbit 1000 km above the surface of the earth. A space scientist wants to transfer the satellite to a circular orbit 1500 km above the surface. The amount of work that must be done to accomplish this is

A) 3.43 GJ B) 1.71 GJ C) –1.71 GJ D) 66.5 GJ E) –3.43 GJ

Ans: B

Section: 11–3 Topic: Gravitational Potential Energy Type: Numerical

56 With what velocity must a body be projected vertically upward from the earth's surface, in the absence of friction, to rise to a height equal to the earth's radius (6400 km)?

A) 4.3×10^5 m/s
B) 2.6×10^3 m/s
C) 10^5 m/s
D) 3.6×10^2 m/s
E) 7.9×10^3 m/s

Ans: E

Section: 11–3 Topic: Gravitational Potential Energy Type: Numerical

58 The radius of the moon is R. A satellite orbiting the moon in a circular orbit has an acceleration due to the moon's gravity of 0.14 m/s^2. The acceleration due to gravity at the moon's surface is 1.62 m/s^2. The height of the satellite above the moon's surface is

A) 3.4R B) 0.42R C) 11R D) 2.4R E) 1.7R

Ans: D

Section: 11–3 Topic: Gravitational Potential Energy Type: Conceptual

59 Four identical masses, each of mass M, are placed at the corners of a square of side L. The total potential energy of the masses is equal to $-xGM^2/L$, where x equals

A) 4 B) $4+2\sqrt{2}$ C) $4+\sqrt{2}$ D) $4+1/\sqrt{2}$ E) $2+2\sqrt{2}$

Ans: C

Section: 11–3 Topic: Gravitational Potential Energy Type: Numerical

61 In the absence of air resistance, the least speed with which a body must be projected vertically upward from Earth's surface ($m_e = 5.99 \times 10^{24}$ kg, $r_e = 6.37 \times 10^6$ m) if it is to reach an altitude of 800 km is

A) ~1.39×10^7 m/s
B) ~3.73×10^3 m/s
C) ~1.57×10^7 m/s
D) ~3.96×10^3 m/s
E) None of these is correct.

Ans: B

Section: 11–3 Topic: Gravitational Potential Energy Type: Numerical

63 Suppose that a satellite is in a circular orbit at a height of 2.00×10^6 m above Earth's surface. What is the speed of a satellite in this orbit?

A) 8.31×10^1 m/s
B) 6.90×10^3 m/s
C) 4.76×10^7 m/s
D) 9.62×10^4 m/s
E) None of these is correct.

Ans: B

Section: 11–3 Topic: Gravitational Potential Energy Type: Numerical

64 Suppose that a satellite is in a circular orbit at a height of 2.00×10^6 m above Earth's surface. What is the acceleration due to gravity at this elevation?

A) 9.80 m/s^2
B) 3.22 m/s^2
C) 5.67 m/s^2
D) 7.68 m/s^2
E) None of these is correct.

Ans: C

Section: 11–3 Topic: Gravitational Potential Energy Type: Numerical

65 Suppose that a satellite is in a circular orbit at a height of 2.00×10^6 m above Earth's surface. What is the period of the satellite's motion at this elevation?

A) 5.65 h B) 4.24 h C) 1.07 h D) 2.12 h E) None of these is correct.

Ans: D

Section: 11–3 Topic: Gravitational Potential Energy Type: Numerical

67 A satellite in circular orbit 1.609×10^6 m above the surface of Earth ($r_e = 6.436 \times 10^6$ m) has an acceleration toward Earth of

A) 9.76 m/s^2 B) 6.25 m/s^2 C) 7.80 m/s^2 D) 8.73 m/s^2 E) 15.3 m/s^2

Ans: B

Section: 11–3 Topic: Gravitational Potential Energy Type: Factual

68 The radius R of a stable, circular orbit for a satellite of mass m and velocity v about a planet of mass M is given by

A) $R = Gv/M$
B) $R = Gv/mM$
C) $R = GmM/v$
D) $R = GM/mv$
E) $R = GM/v^2$

Ans: E

Section: 11–3 Topic: Gravitational Potential Energy Type: Numerical

69 Two objects with masses M_1 = 30,000 kg and M_2 = 70,000 kg are initially very far apart and at rest. If due to gravitational attraction the two objects attract each other, calculate their total kinetic energy when they are 100 km apart.

A) 1.4×10^{-3} J
B) 1.4×10^{-11} J
C) 1.4×10^{-6} J
D) 0.7×10^{-3} J
E) 0.7×10^{-6} J

Ans: C

Section: 11–3 Topic: Gravitational Potential Energy Type: Numerical

72 A satellite of 1000 kg is in a circular orbit at a height of R_E above the surface of Earth. Calculate the minimum energy required to put such a satellite into this orbit. ($R_E = 6.38 \times 10^6$ m, $M_E = 5.98 \times 10^{24}$ kg, $G = 6.67 \times 10^{-11}$ N·m^2/kg^2)

A) 3.13×10^{10} J
B) 8.34×10^{10} J
C) 4.69×10^{10} J
D) 6.25×10^{10} J
E) 1.56×10^{10} J

Ans: C

Section: 11–3 Topic: Gravitational Potential Energy Type: Numerical

76 Two satellites of the same mass are placed in orbits around Earth. Satellite One is at an altitude of $1R_E$ and Satellite Two at an altitude of $2R_E$ where R_E = 6370 km is the radius of Earth. What is the ratio of the potential energy of Satellite One to Satellite Two?

A) $\frac{1}{2}$ B) 2/3 C) 3/2 D) $\frac{1}{4}$ E) 2

Ans: C